KENKE COMPANY

肯克®
KENKE

KENKE COMPANY

公司简介

Company Profile

肯克，中国重工装备生产基地，位于美丽的太湖之滨，运河之畔——滨湖区勤新工业园。

公司主要生产各种焊接辅机、专机、切割设备，拥有雄厚的技术力量和生产能力，产品规格齐、品种多、成套化、系列化，亦可根据用户要求进行特殊，非标设计。现产品已遍及风力发电、锅炉、石化、冶金、机械、船舶等行业，并远销中东、东南亚、欧洲、澳洲等地。

肯克公司坚持“科技创造价值、诚信打造肯克”的企业精神，“脚踏实地，诚恳守信”的企业作风，以更好的质量，更高的品位，更优惠的价格，更齐全的品种，更优良的服务立足市场，已为国内外诸多用户提供了优质的设备。公司现为“中国焊接协会”理事单位、“中国机械工程学会压力容器分会”会员单位。

中国重工装备生产基地

CHINESE HEAVY INDUSTRY EQUIPMENT PRODUCTION BASE

KENKE, Chinese Heavy Industry Equipment Production Base, is situated at Qinxin Industrial Fields in beautiful Qianqiao Town by Tai Lake.

Our company mainly produces various kinds of welding equipment, special equipment, cutting equipment, and have abundant technology competence and manufacture capacity. Our products are full in specification, rich in variety, featuring in serialization and complete set. Also we can design and produce special equipment according to customers' requirement. Now our products have been widely used and gained approval in industries as wind power, boiler, pressure vessel, chemical machinery, metallurgical, construction machinery, shiping, etc. Our products have sold to South East Asia, Middle East, Europe and Australia, etc.

By right of enterprise spirit of "Science makes value, credit builds KenKe", as well as enterprise policy of "Down-to-earth, faithful and steadfastness", KenKe company steps into market with better quality, superior standard, more favorable price, complete variety, excellent service, and have provide a lot of quality equipment to customer at home and abroad. Now, we are the director of 'China Welding Association' and the member of 'China Mechanical Engineering Society Of Pressure Vessels Branch' .

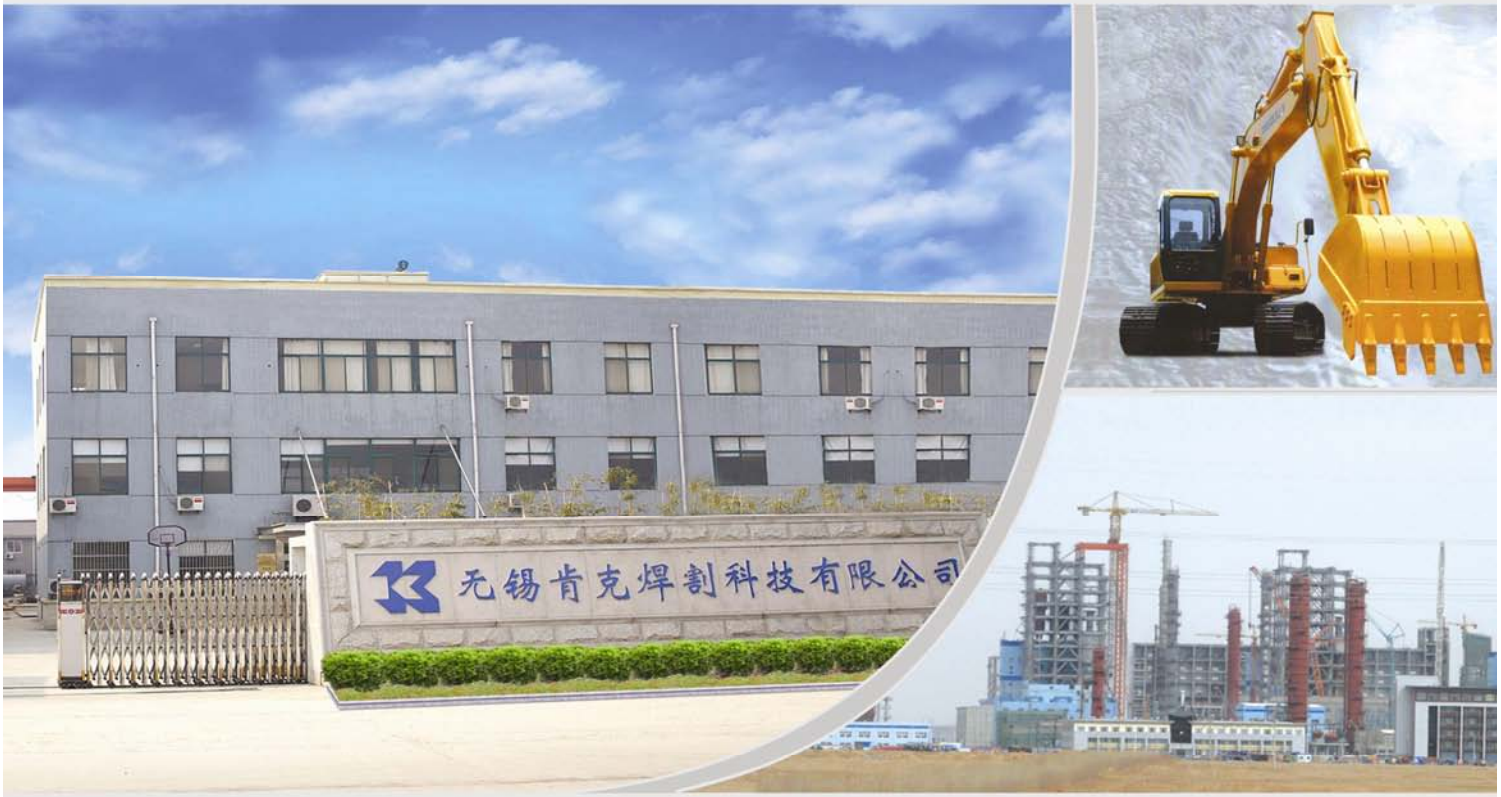

- 焊接操作机篇 Welding Manipulator Series
- 焊接滚轮架篇 Welding Turning-roll Series
- 焊接变位机篇 Welding Positioner Series
- 坡口加工设备篇 Beveling Processing Machine Series
- 数控切割机篇 CNC Cutting Machine Series
- 风力塔筒焊接生产线 Wind Tower Production Line

自动焊接中心篇 Automatic Welding Center

自动焊接中心 是由焊接操作机、自动焊机和焊接滚轮架或焊接变位机配套组合而成，广泛地应用于锅炉、压力容器、石油石化、冶金建设、制冷设备、工程机械、船舶制造、风力发电等行业中各种焊缝及其它圆筒形构件的内外纵缝和环缝的焊接。

Automatic welding center consists of welding manipulator,automatic SAW machine and welding turning roll or welding positioner,which is widely used in industries as boiler,pressure vessel,chemical petroleum,metallurgical construction,refrigeration,construction machinery,shipbuilding,wind power,for inner and outer longitudinal welding and circumferential welding of various seams on cylindrical members.

可选配功能 Optional Functions

配置及特点：

本系列焊接操作机主要结构件采用大型数控设备压制成型，焊接后进行回火处理，经抛丸处理后油漆，具有结构合理，强度高，刚性好等特点，根据用户需要可配直线滚珠导轨。

整机为积木式结构，根据用户需求可进行使用范围及性能的扩展。

Configuration and characteristic:

This series of welding manipulator is pressed into shape by means of large CNC equipment,tempered post welding,and painted after shot blasting,with advantages of reasonable structure,high strength and good rigidity.Also linear ball-bearing guideway can be selected according to customer requirement.

The entire machine is of fit-up structure,of which applications and performance can be expanded according to customer choice.

小机头（适用筒体最小直径400㎜）
Low profile head(min vessel diameter 400mm)

窄坡口焊接机头配焊缝跟踪
Narrow groove welding head with weld seam tracker

带极堆焊系统
Cladding nozzle system

三维自动跟踪
Three-dimension auto-tracking monitoring system

自动弧长控制
Auto-tracking of welding arc

自动焊接中心
Automatic Welding Center

自动焊接中心
Auto-welding center

重型焊接中心
Heavy-duty welding center

精密自动焊接中心
Precise Auto-welding center

带极堆焊焊接中心
Strip Surfacing Welding System

www.kenketec.cn

焊接操作机篇 Welding Manipulator Series

焊接操作机 具有结构先进，功能齐全，操作方便等特点，对提高焊接质量起了可靠的保证作用。

根据横臂前端的承载重量、有效伸缩、升降行程，规格型号可分为轻型、标准型、重型、超重型；结构形式有固定式、固定带回转式、移动带回转式三种。

The welding manipulator is advance structure design,multi-functions and easy operation.Then increacing production capacity and assure the quality.

The welding manipulator could be divided into light,standard type,heavy,and super-heavy according to weight-bearing,effectively stretching and up/down stroke.

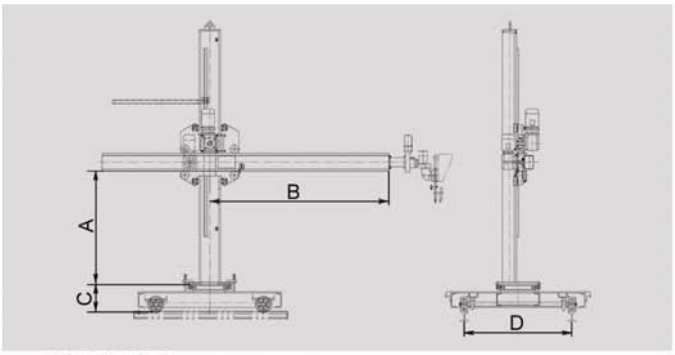

LHQ（轻型）系列 LHQ(light) series

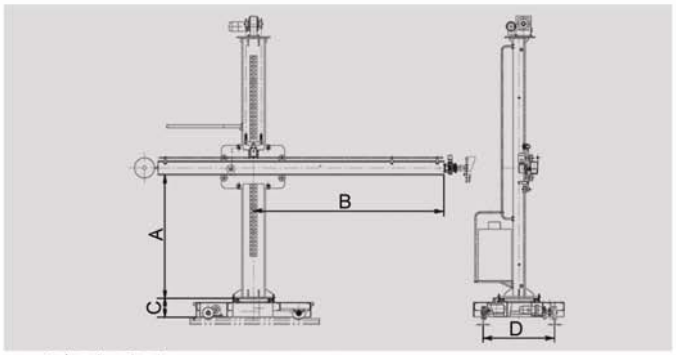

LHJ（中型）系列 LHJ(medium) series

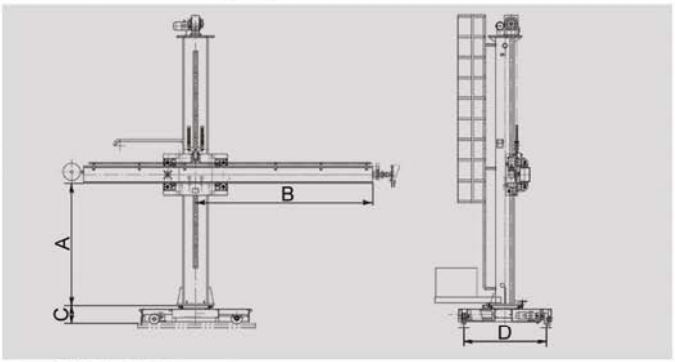

NLH（重型）系列 NLH(heavy) series

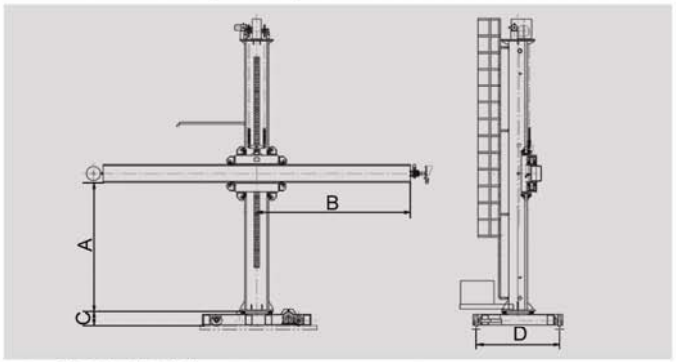

LHW（超重型）系列 LHW(super-heavy) series

主要技术参数 Main Technical Parameters

规格型号 Type		LHQ（轻型 Light）	LHJ（中型 Medium）	NLH（重型 Heavy）	LHW（超重型 Super-heavy）
横臂立柱矩形导轨宽度 The rectangular guiding rail width of column and boom(mm)		25	35	60	75
横臂升降行程 Lifting stroke(m)		1-3	2-5	2-8	2-13
横臂伸缩行程 Retracting stroke(m)		1-3. 5	2-5	2-8	4-12
升降速度 Lifting speed(mm/min)		1200	600	800	800
横臂下沿离立柱底板最小距离（A） Min. height under boom(A) (mm)		300	400	450	600
立柱中心到横臂前端最小距离（B） Min. distance from column center to the front end of the boom(B) (mm)		500	1000	1000	1000
伸缩速度 Retracting speed(mm/min)		100-1500	100-1500	100-1500	100-1500
立柱回转 Column revolving	角度 Angle(°)	±180	±180	±180	±180
	速度 Speed(rpm)	手动 By manual	0. 11/手动By manual	0. 11/手动By manual	0. 10/手动By manual
台车行走速度 Trolley traveling speeding(mm/min)		手动推动 Traveling by manual	2000	2000	1000
台车高度（C） Height of trolley(C) (mm)		300	440	440	440
台车轨距（D） Span of trolley rain(D) (mm)		1200	1500	2000	2500

* 注：具体参数要求根据用户要求来确定。
Note:The parameters determined according to the specific requirement of users.

焊接操作机系列
Welding Manipulator Series

6m×6m中型焊接操作机
6m×6m medium-duty welding manipulator

批量生产的精密型焊接操作机（采用滚珠直线导轨）
Precise welding manipulator in batch production (uses ball bearing linear guide rail)

6m×5m重型焊接操作机（配林肯机头）
6m×5m heavy-duty welding manipulator(with LINCOLN head)

特制操作机
The special manipulator

8m×7m超重型焊接操作机（带载人操作平台）
8m×7m super-heavy type welding manipulator(with manned platform)

双立柱式焊接操作机
Double-column Welding Manipulator

SLH系列双立柱式焊接操作机 是我公司在吸取国外先进设备的优点，自行开发的新产品，先后为国内外多家用户单位设计制作，目前为国内独家生产制作单位。

该操作机与传统LH型自动焊接操作机（单立柱）结构上有较大不同，其主要特点是：

1. 采用双立柱结构形式，横臂在二立柱中间运行，与传统单立柱结构形式相比，提高了结构的稳定性。
2. 横臂的伸缩采用磨擦传动，与传统的齿轮齿条传动相比，不但传动稳定，更为重要的是大大提高了设备的安全性能。
3. 由于采用双立柱结构形式，在焊接工件时，机头位置始终在设备的中心线上，从而使工件摆放更为方便。

SLH-series welding manipulator is the new product developed by ourselves on the basis of absorbing merits of advanced equipment from abroad. This kind of product has been adopted by many clients both from home and foreign country,which is unique in domestic market at present.

It has great diversity compared with traditional LH-series welding manipulator(single column),with following features:

1. The equipment is double-column structure.Boom travels amidst two columns.So,it boost safety in comparison to conventional single-column structure.
2. Boom travel is adopted with friction-transmission.Compared with traditional ways of gear and rack,it not only has greater steady transmission,but more importantly,improving equipment safe.
3. Thanks to double-column structure,welding head aims at equipment centerline all the while,making work-piece placement more convenient.

8m×8m双立柱式重型焊接操作机
8m×8m double-column heavy-duty welding manipulator

4m×6m双立柱焊接操作机
4m×6m double-column welding manipulator

批量生产的双立柱焊接操作机
Double-column welding manipulator in batch production

自调式焊接滚轮架
Self-alignment Welding Turning-roll

www.kenketec.cn

自调式单驱动焊接滚轮架 Single-driving self-alignment welding turning-roll

www.kenketec.cn

自调式双驱动焊接滚轮架 Double-driving self-alignment welding turning-roll

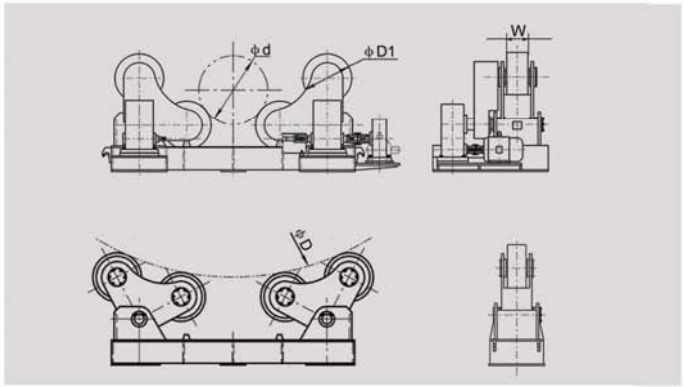

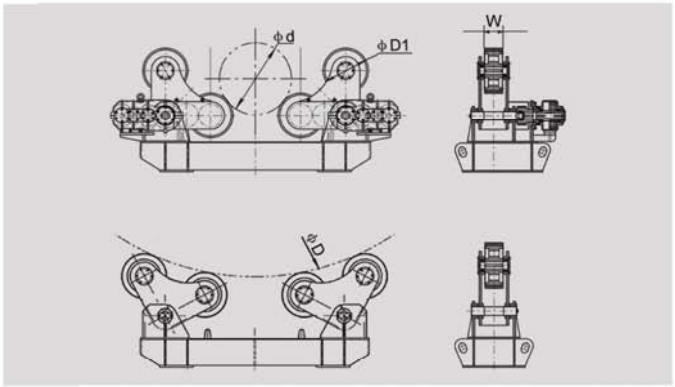

根据工件直径大小自动调节滚轮组的摆角，无须人工调节。聚氨酯滚轮，承载能力大，驱动能力强。根据驱动方式分为单驱动、双驱动两种形式。

本公司还可根据用户需要设计定制各种类型的滚轮架。

Tilt angle of rollerbed can be automatically adjusted as per diameters of workpiece,and no manual adjustment is needed.Polyurethane rollers have high bearing capacity and strong driving ability.According to driving mode,it could be devided into unilateral and bilateral driving.

We also can design the customize various types of the turning-rolls in accordance with the customer's requirement.

主要技术参数 Main Technical Parameters

规格型号 Type		HGZ-5	HGZ-10	HGZ-20	HGZ-40	HGZ-60	HGZ-80	HGZ-100	HGZ-150
最大承载重量 Max load weight(t)		5	10	20	40	60	80	100	150
聚氨酯轮 Polyurethane tire	直径D1 Diameter D1(mm)	250	300	350	400	450	450	500	500
	宽度W Width W(mm)	100	120	150	160	180	240	240	2×200
筒体直径 Cylinder D.	最小d Min.d(mm)	250	320	500	600	750	850	1000	1000
	最大D Max.D(mm)	2500	3200	3800	4500	5000	5500	6300	6300
滚轮线速度 Roller linear speed(m/h)		6-60	6-60	6-60	6-60	6-60	6-60	6-60	6-60
电机功率 Motor power	单驱动 Single driver(kw)	0.75	1.1	1.5	3	4	4	5.5	7.5
	双驱动 Dual-drive(kw)	/	/	/	2×1.5	2×2.2	2×3	2×3	2×4
调速方式 Way of setting		交流变频无级调速 AC frequency conversion stepless inverter speed regulation							

特殊滚轮架系列
The Special Turning-rolls Series

www.kenketec.cn

自调式焊接滚轮架在电力行业中的应用
Application of self-alignment turning-roll in power industry

www.kenketec.cn

探伤滚轮架（宽轮）
Testing turning-roll(wide-roll)

www.kenketec.cn

白色耐磨橡胶焊接滚轮架（宽轮）
Welding turning-roll with white abrasion-proof rubber(wide-roll)

www.kenketec.cn

顶升式焊接滚轮架
Lifting assembly turning-roll

www.kenketec.cn

自调（可调）式双驱动焊接滚轮架（聚氨酯轮）
Double-driving self-alignment(adjustable) turning-roll(polyurethane tire)

www.kenketec.cn

自调式双驱动焊接滚轮架
Double-driving self-alignment turning-roll

可调式焊接滚轮架
Adjustable Welding Turning-roll

采用预留螺孔或丝杆调节滚轮组中心距，适应工件直径变化。进口变频器无级调速，调速范围宽，精度高，启动力矩大。
本公司还可根据用户需要设计定制各种类型的滚轮架。

Bolt holes are preformed to adjust the center to center spacing of roller group,in accordance with the diameter variations of workpiece. Stepless speed regulation of imported frequency converter is adopted, with a wide range of speed regulation,high precision and large start-up moment.

We also can design the customize various types of the turning-rolls in accordance with the customer's requirement.

www.kenketec.cn

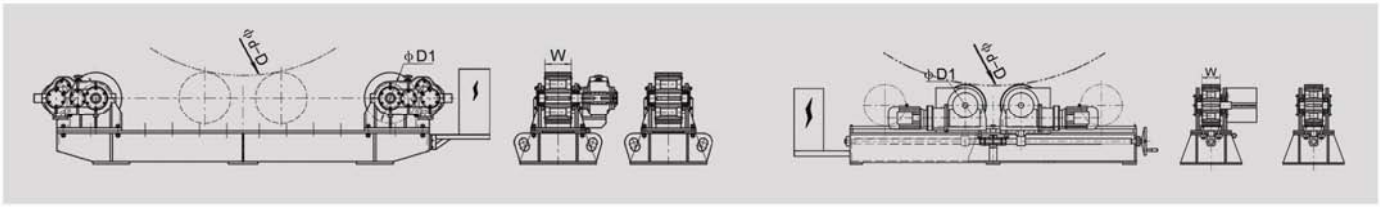

主要技术参数 Main Technical Parameters

规格型号 Type		HGK-2	HGK-5	HGK-10	HGK-20	HGK-40	HGK-60	HGK-80	HGK-100
最大承载重量 Max load weight(t)		2	5	10	20	40	60	80	100
聚氨酯轮 Polyurethane tire	直径D1 Diameter D1(mm)	200	250	300	350	400	450	450	500
	宽度W Width W(mm)	80	120	130	180	220	2×180	2×180	2×200
筒体直径 Cylinder D.	最小d Min.d(mm)	150	250	300	500	500	500	800	800
	最大D Max.D(mm)	2000	2800	3200	4500	5000	5000	6000	6000
电机功率 Motor power(kw)		2×0.18	2×0.37	2×0.55	2×1.1	2×1.5	2×2.2	2×3	2×3
滚轮线速度 Roller linear speed(m/h)		6-60	6-60	6-60	6-60	6-60	6-60	6-60	6-60
调速方式 Way of setting		交流变频无级调速 AC frequency conversion stepless inverter speed regulation							

规格型号 Type		HGK-100	HGK-160	HGK-200	HGK-250	HGK-300	HGK-500	HGK-800	HGK-1200
最大承载重量 Max load weight(t)		100	160	200	250	300	500	800	1200
金属轮 Metallic	直径D1 Diameter D2(mm)	500	600	700	700	800	800	900	1000
	宽度 Width(mm)	200	200	250	250	300	350	400	480
筒体直径 Cylinder D.	最小d Min.d(mm)	800	800	800	800	800	1000	1000	1000
	最大D Max.D(mm)	6000	6000	6500	6500	6500	8000	8000	8000
电机功率 Motor power(kw)		2×3	2×4	2×4	2×5.5	2×5.5	2×7.5	2×11	2×15
滚轮线速度 Roller linear speed(m/h)		6-60	6-60	6-60	6-60	6-60	6-60	6-60	6-60
调速方式 Way of setting		交流变频无级调速 AC frequency conversion stepless inverter speed regulation							

特殊滚轮架系列
The Special Turning-rolls Series

可倾斜式焊接滚轮架
Slanting welding turning-roll

批量生产的窄轮滚轮架（锅炉厂专用）
Turning-roll of narrow roll in batch production(specialized for boiler factory)

窄轮滚轮架
Turning-roll with narrow roller

200t可调式焊接滚轮架
200t adjustable welding turning-roll

500t自动平移防窜滚轮架
500t automatic moblie anti-drift rotator

500t防窜滚轮架
500t anti-drift rotator

特殊滚轮架系列
The Special Turning-rolls Series

www.kenketec.cn

出口英国的焊接滚轮架（聚氨酯轮）
The welding turning-roll exported to England(polyurethane tire)

www.kenketec.cn

出口沙特的焊接滚轮架
The welding turning-roll exported to Saudi Arabia

www.kenketec.cn

100t丝杆可调式滚轮架（带电动行走）
100t conventional power control turning-roll(Motorized travelling)

www.kenketec.cn

500t丝杆可调式滚轮架
500t conventional power control turning-roll

www.kenketec.cn

批量生产的200t丝杆可调式滚轮架（聚氨酯轮）
200t conventional power control turning-roll in batch production(polyurethane tire)

www.kenketec.cn

200t带行走焊接滚轮架（聚氨酯轮）
200t mobile welding rotator(polyurethane tire)

装配滚轮架
Assembly Turning-rolls

装配式滚轮架主要用于容器的拼接、装配与焊接，可以使得客户大量节约为实现所需作业而付出时间和精力的成本。

本公司可根据客户要求提供各种装配式滚轮架，这些滚轮架都是适用于额定负荷下的牵引和自对中心作业。

The Assembly turning-rolls are mainly used for the sitiching, assembling and welding vessels.These turning-rolls can make it possible for customers to achieve considerable savings of time and effort needed to pay operating costs.

We can provide Assembly Turning-Rolls according to the customers' requirements.

批量生产的500t装配滚轮架
500t assembly turning-roll in batch production

800t丝杆可调式滚轮架
800t conventional power control turning-roll

200t带行走焊接滚轮架（聚氨酯轮）
200t mobile welding rotator(polyurethane tire)

自调式装配滚轮架
Self-aligning fit-up rotator

100t顶升式装配滚轮架（丝杆可调式）
100t lifting assembly turning-roll(conventional power control)

HBJ系列焊接变位机
HBJ Welding Positioner Series

焊接变位机一般由工作台回转机构和翻转机构组成，通过工作台的升降，翻转和回转使固定在工作台上的工件达到所需的焊接，装配角度，工作台回转为变频无级调速，可得到满意的焊接速度。

由于偏心距和重心距的原因，对工件较长和重心位置偏移较多的工件，应选择稍大一点的型号。标准型焊接变位机不能满足所有工件，选择时务请提供需加工工件的形状及重量，以及加工工艺。本公司会提供出合适的方案作参考。

Welding positioner is mainly composed of worktable revolving unit and tilting unit.By means of worktable elevation,work-piece fixed on the worktable can be placed to ideal position for welding and assembly.Speed of worktable revolving is controlled invariably and continuously with inverter,attaining satisfactory welding speed.

For the reason of eccentric-distance and gravity-center-distance,slightly higher model should be selected for longer work-piece and work-pieces of which gravity-center has greater offset.If standard welding positioner can not meet requirement for all work-pieces,be sure to offer us shape,weight and machining technology of work-piece,so we can furnish suitable proposal for your choice.

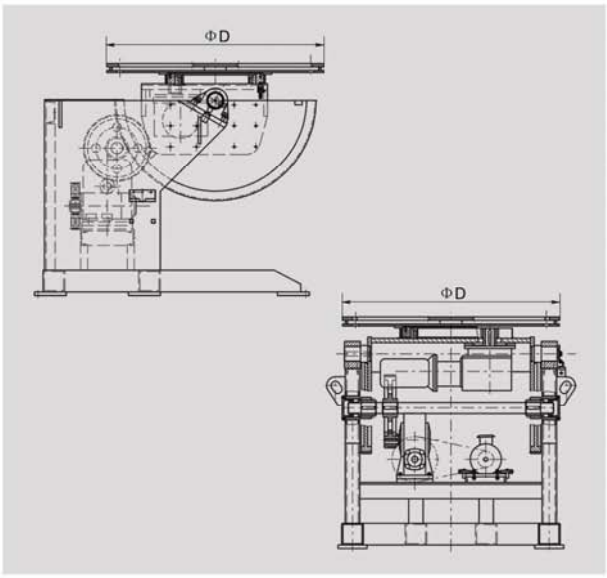

主要技术参数 Main Technical Parameters

规格型号 Type	额定承载 Rated Loading (kg)	回转速度 Rotation Speed (rpm)	翻转速度 Tilting Speed (rpm)	翻转角度 Tilting Angle (°)	工作台尺寸D Worktable Dia (mm)	回转电机功率 Rotation Power (kw)	翻转电机功率 Tilting Power (kw)	调速方式 Speed Regulation	最大偏心距 Max.Eccentricity (mm)	最大重心距 Max.Gravity (mm)
HBJ-01	100	0.4-4	手动 By manual	0-90	Φ400	0.18	/	交流变频无级调速 AC frequency conversion stepless speed regulation	100	200
HBJ-03	300	0.1-1	手动 By manual	0-90	Φ600	0.18	/		150	200
HBJ-03	300	0.1-1	1	0-90	Φ600	0.18	0.18		150	200
HBJ-06	600	0.05-0.5	0.4	0-90	Φ1000	0.37	0.75		150	200
HBJ-12	1200	0.05-0.5	0.4	0-90	Φ1200	0.75	1.1		200	250
HBJ-30	3000	0.05-0.5	0.2	0-135	Φ1400	1.1	2.2		200	300
HBJ-50	5000	0.05-0.5	0.2	0-135	Φ1500	1.5	3		200	300
HBJ-100	10000	0.05-0.5	0.2	0-135	Φ2000	3	4		200	400
HBJ-150	15000	0.04-0.4	0.15	0-135	Φ2200	4	7.5		200	500
HBJ-200	20000	0.04-0.4	0.15	-45-90	Φ2500	5.5	11		200	600
HBJ-300	30000	0.03-0.3	0.15	-45-90	Φ3000	5.5	15		200	650
HBJ-500	50000	0.02-0.2	0.06	-45-90	Φ4000	11	18.5		200	800

＊ 注：回转调速可采用直流或伺服调速，范围可达100倍。 Rotation speed regulation could be used DC or servo controlling,and the scope could be about 100 times.

焊接变位机篇 Welding Positioner Series

HBS系列焊接变位机 HBS Welding Positioner Series

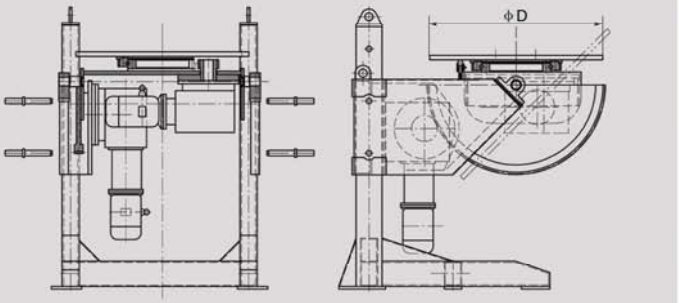

主要技术参数 Main Technical Parameters

规格型号 Type	额定承载 Rated Loading (kg)	回转速度 Rotation Speed (rpm)	翻转速度 Tilting Speed (rpm)	翻转角度 Tilting Angle (°)	工作台尺寸D Worktable Dia (mm)	回转电机功率 Rotation Power (kw)	翻转电机功率 Tilting Power (kw)	调速方式 Speed Regulation	最大偏心距 Max.Eccentricity (mm)	最大重心距 Max.Gravity (mm)
HBS-06	600	0.08-0.8	0.4	0-135	Φ800	0.37	0.75	交流变频无级调速 AC frequency conversion stepless speed regulation	100	200
HBS-10	1000	0.08-0.8	0.34	0-135	Φ1000	0.75	0.75		100	200
HBS-20	2000	0.08-0.8	0.29	0-135	Φ1200	1.1	1.1		200	200

TWS系列焊接变位机 TWS Welding Positioner Series

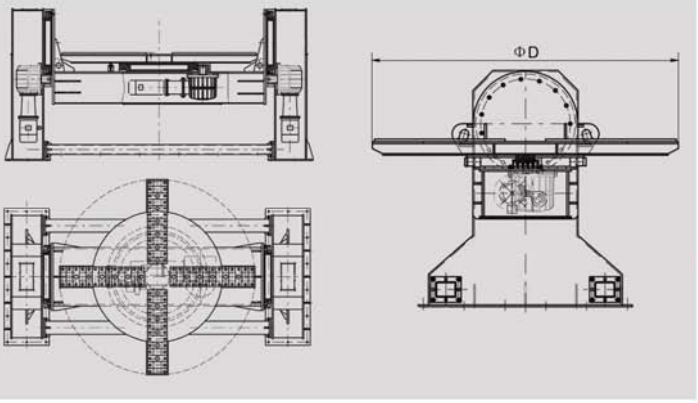

主要技术参数 Main Technical Parameters

规格型号 Type	额定承载 Rated Loading (kg)	回转速度 Rotation Speed (rpm)	翻转速度 Tilting Speed (rpm)	翻转角度 Tilting Angle (°)	工作台尺寸D Worktable Dia (mm)	回转电机功率 Rotation Power (kw)	翻转电机功率 Tilting Power (kw)	调速方式 Speed Regulation	最大偏心距 Max.Eccentricity (mm)	最大重心距 Max.Gravity (mm)
TWS-50	5000	0.05-0.5	0.2	0±90	Φ2500	3	2×2.2	交流变频无级调速 AC frequency conversion stepless speed regulation	200	600
TWS-100	10000	0.05-0.5	0.1	0±90	Φ2500	4	2×3		200	600
TWS-200	20000	0.04-0.4	0.1	0±90	Φ3000	5.5	2×5.5		200	1000
TWS-300	30000	0.03-0.3	0.1	0±90	Φ3500	7.5	2×7.5		200	1500
TWS-500	50000	0.02-0.2	0.1	0±90	Φ4000	11	2×11		200	2000
TWS-1000	100000	0.01-0.1	0.1	0±90	Φ4000	18.5	2×15		200	2500

* 注：回转调速可采用直流或伺服调速，范围可达100倍。 Rotation speed regulation could be used DC or servo controlling,and the scope could be about 100 times.

www.kenketec.cn

120t焊接变位机
120t welding positioner

www.kenketec.cn

35t焊接变位机
35t welding positioner(Export to Saudi Arabia)

www.kenketec.cn

15t焊接变位机
15t welding positioner

www.kenketec.cn

160t双座式焊接变位机
160t double base-type welding positioner

www.kenketec.cn

40t双座式焊接变位机
40t double base-type welding positioner

www.kenketec.cn

批量生产的双座式焊接变位机
Double base-type welding positioner in batch production

特殊变位机系列
The Special Positioner Series

20t焊接变位机
20t welding positioner

滑台式焊接变位机
Sliding platform welding positioner

L型液压升降双回转变位机
L-type hydraulic elevating and double turning positioner

L型升降双回转变位机
L-type elevating and double turning positioner

批量生产的L型（升降）双回转变位机
L-type(elevating) and double turning positioner in batch production

特制变位机
The special positioner

特殊变位机系列
The Special Positioner Series

www.kenketec.cn

头尾升降双回转变位机
Head and tail stocks elevating and double turning positioner

www.kenketec.cn

头尾升降双回转变位机
Head and tail stocks elevating and double turning positioner

www.kenketec.cn

头尾式双回转变位机
Head and tail stocks and double turning positioner

www.kenketec.cn

特制焊接变位机
The special welding positioner

www.kenketec.cn

50t回转平台
50t rotating table

www.kenketec.cn

30t回转平台
30t rotating table

XBJ系列铣边机
XBJ Edge Milling Machines Series

该系列铣边机与传统铣边机相比，其导轨安装形式为可拆装式，并通过热处理，床身结构更合理，铣削头运行更平稳可靠，其进给系统与返程系统完全独立，返程速度快、效率高、铣刀盘的角度调整方便，定制刀盘与标准刀盘可互换，是传统铣边机的更新换代产品。

Compared with the traditional edge milling machines,this machine series is dismountable in their tracks,more rational in structure by heat-treatment of the bench,more reliable and stable in the milling & turning head's running.The feed and feed-back systems are fully independent respectively.The feed-back is quick and is highly efficient.The angle of the milling tool's tray is convenient in adjustment,and the custom-built tool rest and the normal tool rest can be inter-converted.They are the updated products of the traditional edge milling machine.

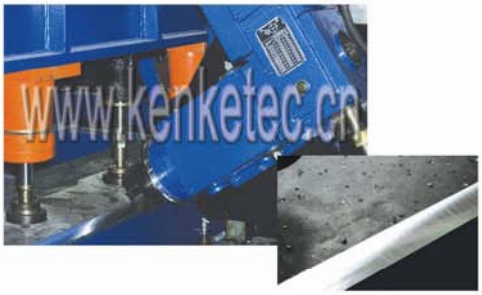

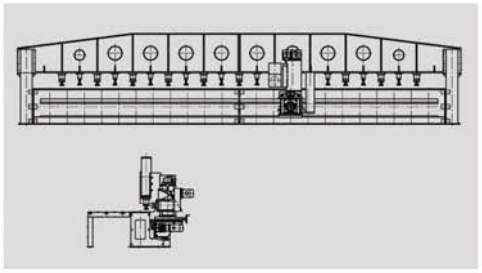

主要技术参数 Main Technical Parameters

规格型号 Type	XBJ-3	XBJ-6	XBJ-9	XBJ-12	XBJ-15	XBJ-18
有效铣加工作业范围长度 Effective milling zone length(m)	3	6	9	12	15	18
铣加工角度调节 Milling angle adjustment(°)	0-45	0-45	0-45	0-45	0-45	0-45
适应钢板厚度 Applicable steel plate thickness(mm)	6-50	6-50	6-50	6-50	6-50	6-50
一次铣削最大宽度 Max. milling width by on pass(mm)	8	8	8	8	8	8
铣刀行进速度 Milling travel speed(m/min)	0. 25-0. 6	0. 25-0. 6	0. 25-0. 6	0. 25-0. 6	0. 25-0. 6	0. 25-0. 6
铣刀返程速度 Milling return speed(m/min)	4	4	4	4	4	4
铣削主轴速度 Spindle speed(rpm)	125-630	125-630	125-630	125-630	125-630	125-630
液压压力 Hydraulic pressure(mPa)	≥3. 5	≥3. 5	≥3. 5	≥3. 5	≥3. 5	≥3. 5
液压压头数量 Number of clamping shoes(ea)	5	8	11	15	19	23
支撑平台距地面高度 Pass height(from FL) (mm)	900	900	900	900	900	900
进给电机功率 Feeding motor capacity(kw)	1. 5	1. 5	1. 5	1. 5	1. 5	1. 5
油泵电机功率 Hydraulic motor capacity(kw)	4	4	4	4	4	4

www.kenketec.cn

12m双铣头铣边机（进口铣削头）
12m double-head edge milling machine(import milling head)

www.kenketec.cn

12m双铣头铣边机（国产铣削头）
12m double-head edge milling machine(domestic milling head)

www.kenketec.cn

9m铣边机
9m edge milling machine

www.kenketec.cn

3m铣边机
3m edge milling machine

滚剪倒角机 Milling and Beveling Machine

该倒角机利用滚剪原理，对钢板边缘按所需角度进行剪切，以得到焊接所需的坡口。尺寸准确、表面光洁、一次成形，不需要清理毛刺，具有操作方便，工效高（每分钟3米），能耗低等优点。

The beveling machine is adopted with the milling principle to mill the angle for the edge of the steel plate,and to get the groove for welding.The machine is accurate in size,bright and smooth in surface,and is formed once.There is no need to make de-burring.It's convenient in operation,very high in working efficiency(three meters per minute)and low in energy consumption.

www.kenketec.cn

主要技术参数 Main Technical Parameters

规格型号 Type	GD-20		
材质 Material	Q235	16Mn	1Cr18Ni9Ti
坡口最大宽度 The max groove width (mm)	20	16	12
倒角度数 The beveling angle(°)	25-55	25-55	25-55
最小直边e The min straight edge(mm)	2	2	2

CNC系列数控火焰/等离子切割机
CNC Series CNC Flame/Plasma Cutting Machines

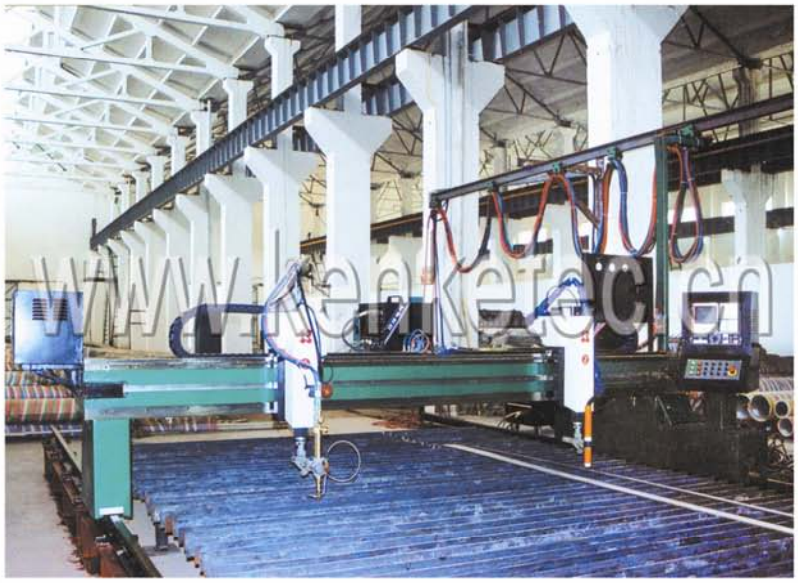

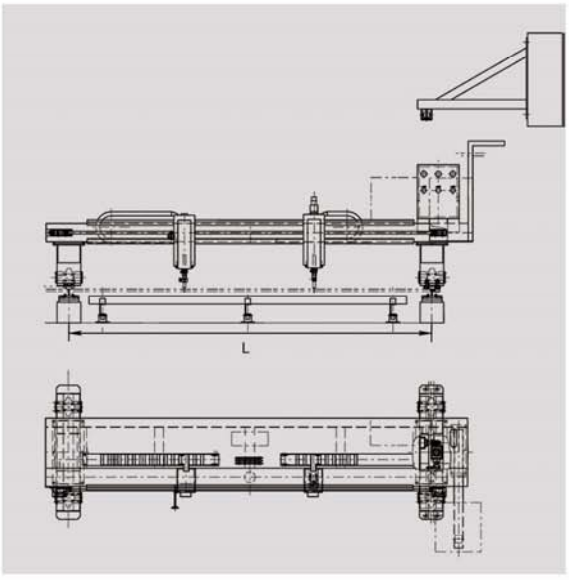

该系列切割机为龙门式结构，整机结构件经过整体退火及抛丸，油漆处理，机架导轨采用高频淬火，磨削镶嵌而成，具有刚性好，精度高，结构稳定等特点。

可配备直线三割炬，无限回转三割炬及等离子割炬，割炬升降机构采用滚珠导轨，可实现自动和电动升降，并可配置自动点火功能。

管线的排放形式可根据用户要求采用悬挂式或坦克链式。

This series of cutting machine is of gantry structure.All the structure members are annealed and shot-blasted integrally and painted.Guide-rails on the frame are treated with high-frequency quenching,then ground and paneled together,with good rigidity,high precision and stable structure.

Linear triple-torch,infinite-revolving triple torch and plasma torch can be equipped based on customer requirement.Torch elevation unit is adopted with ball-bearing guide-way,which can elevate automatically or manually.Also auto-ignition function is available.

Based on customer choice,tube and cable arrangement can be hanging-type or drag-chain type.

主要技术参数 Main Technical Parameters

规格型号 Type	CNC-CG4000	CNC-CG5000	CNC-CG6000	CNC-CG7000	CNC-CG8000
轨距(L) Track span(L)(mm)	4000	5000	6000	7000	8000
切割宽度(L-800mm) Cutting width(L-800mm)(mm)	3200	4200	5200	6200	7200
总宽度(L+800mm) Overall width(L+800mm)(mm)	4800	5800	6800	7800	8800
纵向导轨长度 Longitudinal track length(mm)	14000（可按每副轨道2000mm加长 Each set of rail can be extended with the unit of 2000mm）				
有效切割长度 Valid cutting length(mm)	12000（可延长 Can be extended）				
驱动方式 Driving way	单边驱动 Single drive	双边驱动 Double drive			
驱动速度 Traverse speed(mm/min)	单边驱动50-4000，双边驱动50-6000 Single drive 50-4000,double drive 50-6000				
数控割炬数目 CNC torch	标准配置：2组（可根据用户需要进行增减） Standard configuration:2 groups(The torch amount can be decided by user)				
电源 Power	50HZ 220V				
切割厚度 Cutting thickness(mm)	6-100（火焰 Flame）	若更换大流量割炬切割厚度可达400mm Cutting thickness can be up to 400mm if replacing torch of larger flowage			
切割方式 Cutting mode	火焰（乙炔/氧气，丙烷/氧气），等离子 Flame(acetlene/oxygen,propane/oxygen),plasma				

数控系统及配置
CNC System and Disposes

SH-2000数控系统
SH-2000 CNC system

EDGE-Ⅱ数控系统
EDGE-Ⅱ CNC system

MicroEDGE数控系统
MicroEDGE CNC system

FAGOR8035数控系统
FAGOR8035 CNC system

管排系统（进口防爆管）
Pipe-array(imported explosion-proof pipe)

滚珠直线导轨（配高档型数控切割机）
Ball bearing linear guide rail(for top-grade CNC cutting machine)

松下电机及驱动器
Panasonic motor and driver

精密型减速器
Precise reducer

www.kenketec.cn

CNC系列数控火焰/等离子切割机
CNC Series CNC Flame/Plasma Cutting Machines

数控水下等离子切割机
CNC Underwater plasma cutting machine

数控等离子切割机
CNC plasma cutting machine

数控等离子切割机
CNC plasma cutting machine

6米双驱动数控切割机
6m double-drive CNC cutting machine

数控/直条火焰切割机
CNC/strip flame cutting machine

注： 我公司生产的数控切割机有以下选配功能供用户选用：

1. FastCAM自动编程套料软件
2. 自动点火
3. 电容式自动调高
4. 弧压式自动调高
5. 国产或进口等离子电源

Note: The CNC-Cutting machine has following optional function to choose:

1. FastCAM Nesting Software
2. Automatic ignition
3. Condenser High Sensor
4. Arc-pressure heighting
5. Domestic or imported plasma power source

风塔焊接生产线
Wind Tower Production Line

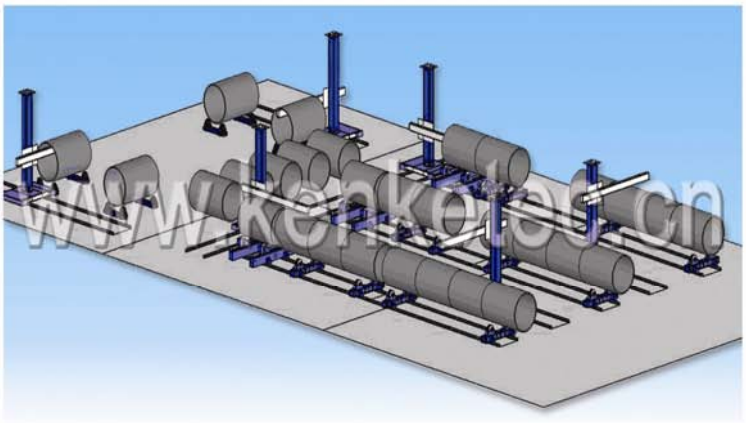

风塔焊接生产线 是我公司根据国内外的成功设计经验和成熟的制造技术，自行开发研制的一条生产线。该生产线主要由数控切割机、铣边机、焊接操作机、焊接滚轮架、焊接系统等设备组成。

我公司已为国内外多个风力发电制造项目提供了大量设备，其中为上海振华港机提供的用于海上风力发电的单节塔筒重量为800t，为国内之最。

The Wind Tower Producing line is the welding system that we develop according to the successful design experience at home and abroad, and mature manufacturing technology. This system mainly consists of CNC Cutting Machine, Milling Edging Machine, Welding Manipulator, Welding Rotator and Welding System.

We have provided plenty of equipment for Wind Power Project in domestic and abroad market. The signle set weight of wind tower made by Shanghai Zheng Hua that used for wind tower in the sea is 800t, which is the most heavy in domestic market.

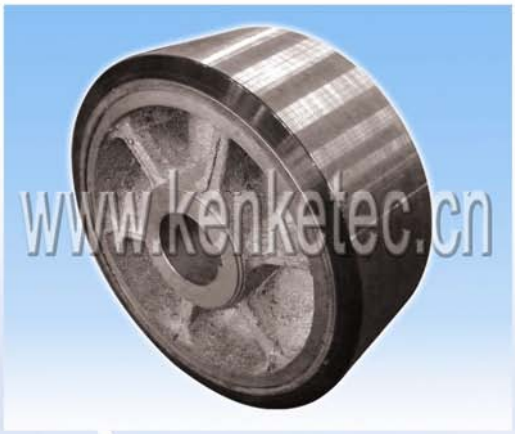

聚氨酯轮 Polyurethane roller：

★ 聚氨酯是一种新兴的有机高分子材料，被誉为“第五大塑料”，具有良好的耐油性、韧性、耐磨性、耐老化性。其拉伸强度、撕裂强度、耐磨强度等性能均比普通橡胶高3-5倍。采用聚氨酯轮后可不再用金属辅助，特别适用于风塔生产线及不锈钢筒体的焊接加工。

★ Polyurethane is a new organic polymer materials, know as ‘the fifth-largest plastics’, which has good oil resistance, toughness, wear resistance and anti-aging. The tensile strenghth, tear strength and wear properties of polyurethan are 3-5 times more than ordinary rubber’s. After polyurethane roller to be used,supporting roller of metal roller is no longer required. Polyurethane roller especially suitable for the welding of wind tower production line and stainless steel cylinder.

工艺流程 Process Flow：

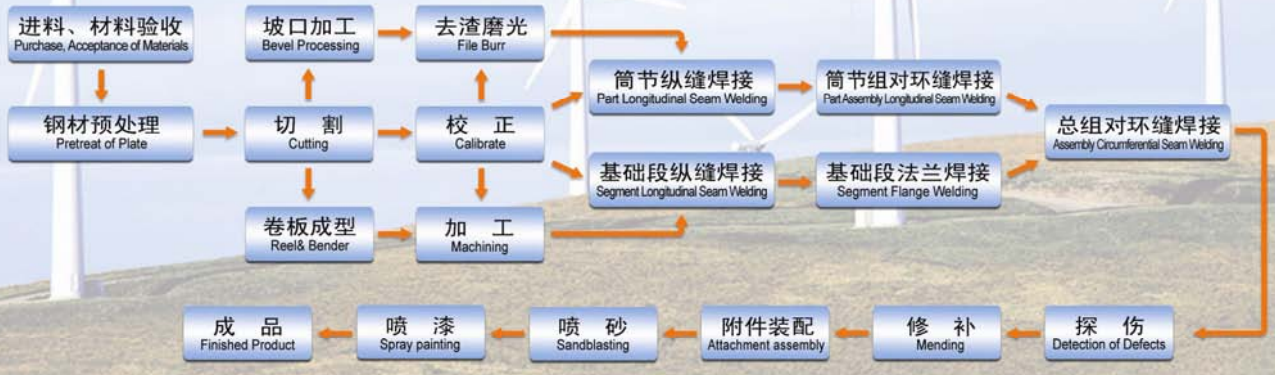

风塔焊接生产线
Wind Tower Production Line

www.kenketec.cn

风塔焊接生产线
Wind tower production line

www.kenketec.cn

法兰焊接
Flange welding

www.kenketec.cn

重型塔筒组对焊接（800t）
Heavy-duty tower fit-up welding(800t)

www.kenketec.cn

液压组对滚轮架
Hydraulic fit-up rotator

www.kenketec.cn

塔筒组对焊接
Tower fit-up welding

www.kenketec.cn

塔筒喷砂、喷涂
Tower sand blasting and painting

光辉业绩

Brilliant Performance

肯克公司科研人员的工作场所就是用户生产现场，用户的难题就是肯克公司的课题。

肯克公司经营人员与遍布全国各地的服务商紧密合作，为用户提供更好的更快的服务。

肯克公司全体员工相信：肯克与用户的利益永远是一致的，为此，制造更先进，更方便，更经济的焊割设备永远是我们的目标。

KenKe technicians take customers' site as their working site,customers' difficulty as their subject.

KenKe personnel cooperate closely with distributors widespread in each corner of country,offering better and quicker service for customer.

Belief of KenKe staff:Interest of KenKe and customer are consistent with each other all the while.For this purpose,to manufacture more advanced,more convenient and more economic welding and cutting equipment is our consistent target.

肯克公司的服务有口皆碑，可随时垂询下列用户，了解产品性能及质量：

KenKe service has been gained high approval from various corners.You can understand our quality and performance by inquiring following customers:

上海振华港机 Shanghai ZPMC　　大连金重 Dalian Jinzhong

大唐国际 Datang International　　中石化南化机 Sinopec Nanjing Chemical Mecinery

中国二重 China Erzhong　　太原重工 Taiyuan Heavy Industry

东方电气 Dongfang Electric　　兰州兰石 Lanzhou Lanshi

上海锅炉厂 Shanghai Boiler Factory　　哈尔滨锅炉厂 Harbin Boiler Factory

杭州锅炉集团 Hangzhou Boiler Group

张家港市江南锅炉压力容器 Zhangjiagang Jiangnan Boilers&Pressure Vessels

法液空 AIR LIQUIDE　　林德工程 Linde Engineering

查特深冷 Chart Cryogenic　　科恩马特殊过程 KNM Special Process

锦西化机 Jinxi Chemical Machinery　　齐鲁石化 Qilu Petrochemical

湘东化机 Xiangdong Chemical Machinery　　上海森松 Shanghai Morimatsu Chemical

阿尔斯通 ALSTOM　　无锡华光锅炉 Wuxi Huaguang Boiler

航天晨光集团 Aerosun Corporation Group　　中铁十八局集团 China Railway 18th Bureau Group

冰轮集团 Moon Group　　武汉一冶 Wuhan Yiye Steel Structure

江西江联 Jiangxi Jianglian Energy&Environment

北方重工 Northern Heavy　　山东山起重工 Shandong Shanqi Heavy Industry

海洋石油工程 Offshore Oil Engineering　　中钢集团 Sinosteel Corporation

欧堡工业 ALLBORG Industries　　上海动力设备 Shanghai Power Equipment

日立建机 Hitachi Construction Machinery　　小松山推 KOMATSU Shantui

胜代机械 KATSUSHIRO Machinery　　关东精密机械 Guandong Precision Machinery

竹内工程机械 Takeuchi Mfg　　厦门厦工集团 Xiamen Xiagong Group

徐工集团 Xuzhou Group　　山河智能 Sunward Intelliget Machinery

海诺建机 Hainuo Construction Machinery　　ABB工程 ABB Engineering

长春轨道客车 Changchun Railway Vehicles

中国运载火箭技术研究院 China Academy of Launch Vehicle Technology(CALT)

……

肯克 KENKE

科技创造价值 诚信打造肯克

总公司：

无锡肯克焊割科技有限公司
无锡肯克重工设备有限公司

地　址：江苏无锡市滨湖区勤新工业园
电　话：0510-83550705 83559885
传　真：0510-83550373
邮　编：214151
http：//www.kenketec.com
　　//www.kenketec.cn
E-mail：kenke@kenketec.com
　　kenke@kenketec.cn

WUXI KENKE WELDING&CUTTING TECHNOLOGY CO.,LTD.
WUXI KENKE HEAVY INDUSTRY EQUIPMENT CO.,LTD.
Add: Qinxin industrial Fields,Binhu Dist,Wuxi City,Jiangsu
Tel: 0510-83550705 83559885
Fax: 0510-83550373
P.C: 214151
http: //www.kenketec.com
　　//www.kenketec.cn
E-mail: kenke@kenketec.com
　　kenke@kenketec.cn

分公司：

天津肯克焊割科技有限公司

地　址：天津市河东区井冈山路1号
电　话：022-26442477
传　真：022-26444162
邮　编：300151
E-mail：kenkehange@126.com

TIANJIN KENKE WELDING&CUTTING TECHNOLOGY CO.,LTD.
Add: Jinggangshan Road, Hedong Dist,Tianjin City
Tel: 022-26442477
Fax: 022-26444162
P.C: 300151
E-mail: kenkehange@126.com

武汉肯克焊割设备有限公司

地　址：湖北武汉市雄楚大街436号
　　文泉商务大厦5楼502室
电　话：027-87225486
传　真：027-87225515
邮　编：430070
E-mail：kenkekeji@126.com

WUHAN KENKE WELDING&CUTTING EQUIPMENT CO.,LTD.
Add: 5-502,436# Wenquan Business Building,Xiongchu Street,
　　Wuhan City,Hubei
Tel: 027-87225486
Fax: 027-87225515
P.C: 430070
E-mail: kenkekeji@126.com

注：本样本中实例图片的规格及颜色如有变动，恕不另行通知。本样本仅作参考，供货时以双方签订的协议书为依据。
Note:Specification and color of equipments in pictures of this catalogue is subject to change without notice.This catalogue is only for reference,technical aspect is taken technical agreement signed between both sides during order as standard.