Intelligent LED Driver
Smart Lighting Control

HangZhou Sllcpower Co.,Ltd

Contents

1、 Who we are 2

2、 Product Selection.....3

3、 NFC Programmer Manual.....6

4、 12W/26W/40W PUP SERIES 7

5、 12W/26W/40W PLP SERIES.....8

6、 40W/75W FLA SERIES..... 9

7、 40W ATP SERIES 10

8、 60W ATP SERIES 11

9、 75W ATP SERIES 12

10、 96W ATP SERIES 13

11、 120W ATP SERIES..... 14

12、 160W ATP SERIES..... 15

13、 200W ATP SERIES 16

14、 250W ATP SERIES 17

15、 300W ATP SERIES..... 18

16、 350W ATP SERIES..... 19

17、 400W ATP SERIES 20

18、 500W ATP SERIES.....21

19、 600W ATP SERIES.....22

20、 680W ATP SERIES.....23

21、 600ATP CV.....24

22、 160W AHP SERIES.....25

23、 250W AHP SERIES.....26

24、 350W AHP SERIES.....27

25、 500W AHP SERIES.....28

26、 600W AHP SERIES.....29

27、 680W AHP SERIES.....30

Who we are

The Basics

- Hangzhou sllcpower Co.,ltd. is a high-tech company focus on LED driver and lighting control .
- Founded in 2016.
- Invested by Hangzhou Silan Microelectronics Limited Ltd.
- Headquarter:HangZhou City,ZheJiang Province,China
- Contract Manufactures:Ningbo,Shenzhen

Sllcpower difference

- Rich experience in LED driver field.
- Foucs on the lighting control system.
- Professional manufacturer with more than 10 years history

Product Selection

Family	Power	Input voltage	Output	Dimming &Program	AUX	Case
12PUP	12W	90-305VAC	CC	√	12V/20mA	Plastic
26PUP	26W	90-305VAC	CC	√	12V/20mA	Plastic
40PUP	40W	90-305VAC	CC	√	12V/20mA	Plastic
12PLP	12W	90-305VAC	CC	√	12V/20mA	Plastic
26PLP	26W	90-305VAC	CC	√	12V/20mA	Plastic
40PLP	40W	90-305VAC	CC	√	12V/20mA	Plastic
40FLA	40W	108-305VAC	CC/CV	√	12V/200mA	Metal
75FLA	75W	108-305VAC	CC/CV	√	12V/200mA	Metal
12SLI	12W	90-264VAC	CV	√	N/A	Plastic
24SLI	24W	90-264VAC	CV	√	N/A	Plastic
40SLI	40W	90-264VAC	CV	√	N/A	Plastic
75SLI	75W	90-264VAC	CV	√	N/A	Plastic
120SLI	120W	90-264VAC	CV	√	N/A	Plastic

Product Selection

Family	Power	Input voltage	Output	Dimming &Program	AUX	Case
40ATP	40W	90-305VAC	CC/CV	√	12V/200mA	Aluminum
60ATP	60W	90-305VAC	CC/CV	√	12V/200mA	Aluminum
75ATP	75W	90-305VAC	CC/CV	√	12V/200mA	Aluminum
96ATP	96W	90-305VAC	CC/CV	√	12V/200mA	Aluminum
120ATP	120W	90-305VAC	CC/CV	√	12V/200mA	Aluminum
160ATP	160W	90-305VAC	CC/CV	√	12V/200mA	Aluminum
200ATP	200W	90-305VAC	CC/CV	√	12V/200mA	Aluminum
250ATP	250W	90-305VAC	CC/CV	√	12V/200mA	Aluminum
300ATP	300W	90-305VAC	CC/CV	√	12V/200mA	Aluminum
350ATP	350W	90-305VAC	CC/CV	√	12V/200mA	Aluminum
400ATP	400W	108-305VAC	CC/CV	√	12V/200mA	Aluminum
500ATP	500W	108-305VAC	CC/CV	√	12V/200mA	Aluminum
600ATP	600W	108-305VAC	CC/CV	√	12V/200mA	Aluminum
680ATP	680W	108-305VAC	CC/CV	√	12V/200mA	Aluminum
600ATP 12/24CV	600W	108-305VAC	CV	N/A	N/A	Aluminum

Product Selection

Family	Power	Input voltage	Output	Dimming &Program	AUX	Case
160AHP	160W	249-528VAC	CC/CV	√	12V/200mA	Aluminum
250AHP	250W	249-528VAC	CC/CV	√	12V/200mA	Aluminum
350AHP	350W	249-528VAC	CC/CV	√	12V/200mA	Aluminum
500AHP	500W	249-528VAC	CC/CV	√	12V/200mA	Aluminum
600AHP	600W	249-528VAC	CC/CV	√	12V/200mA	Aluminum
680AHP	60W	249-528VAC	CC/CV	√	12V/200mA	Aluminum

-The NFC controller can modulate the output current and output voltage.
-Non-contact process, therefore much safer compared to traditional ones.
-Power devices can be programmed without power on.
-Timer dimming.
-Dim to off option.

NFC Controller Manual

STEP1:Setting NFC Controller

Set desired output parameter to your controller.Select{4.Transmit},and press OK bottom once to complete the setting.Setting accuracy is 1mA,or 1V.

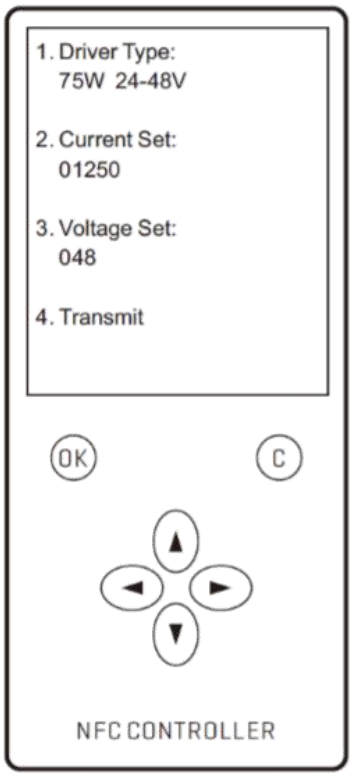

Figure1.Output Settings

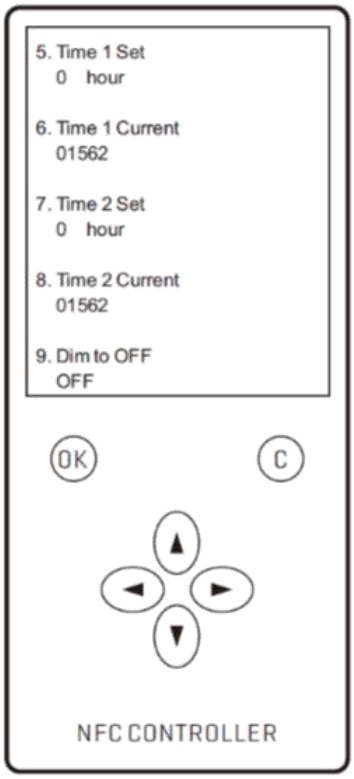

Figure2.Dimming Settings

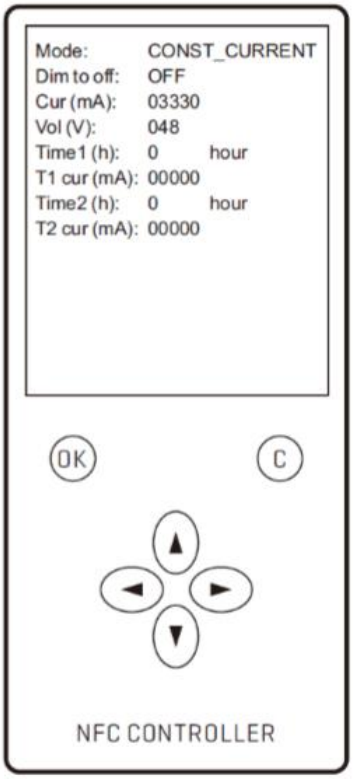

Figure3.Settings Complated

STEP2:One key programming

Put controller on the "signal receiver"window,and press"OK"bottom,the controller displays PASS,and programming is successfully completed.

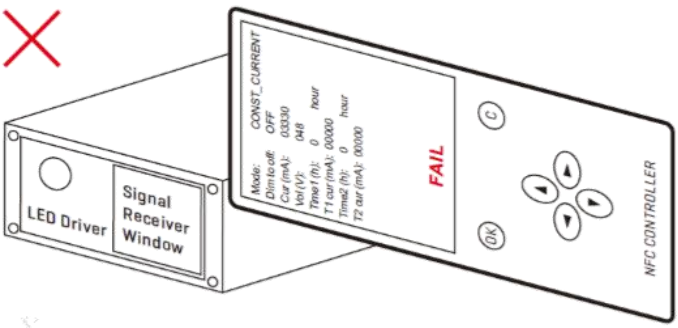

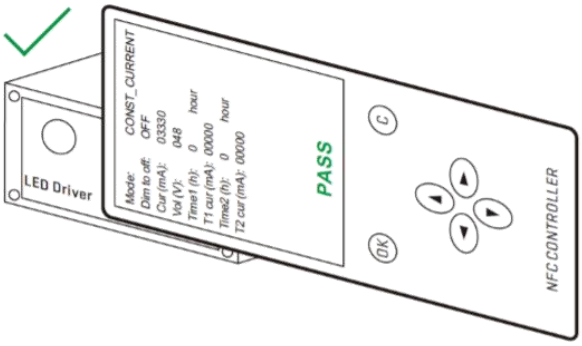

12W/26W/40W PUP SERIES

- -90-305Vac input
- -NFC technology programmable without driver power on
- -Constant power programmable design
- -High efficiency (up to 89%), active power factor correction
- -Ultra low THD at light load
- -0~10V/ PWM/ Timer,Dim to off option
- -AUX 12V/20mA
- -UL recognized with HL/ TL/Surge(Diff:4KV,Common:4KV)

5 years warranty

Approvals: IP67 RoHS CE c UL us LISTED (LED DRIVER) E488381

Part number	Constant Power output voltage range	Working Voltage Range	Programmable Constant Current Region
12PUP8-15C	8-15V	5-15V	0.6-1.5A
12PUP24-45C	25-45V	15-45V	0.2-0.5A
26PUP24-40C	24-40V	14.4-40V	0.43-1.08A
26PUP40-68C	40-68V	24-68V	0.26-0.65A
40PUP24-40C	24-40V	14.4-40V	0.67-1.67A
40PUP40-68C	40-68V	24-68V	0.4-1A
40PUP68-114C	68-114V	40.8-114V	0.24-0.59A

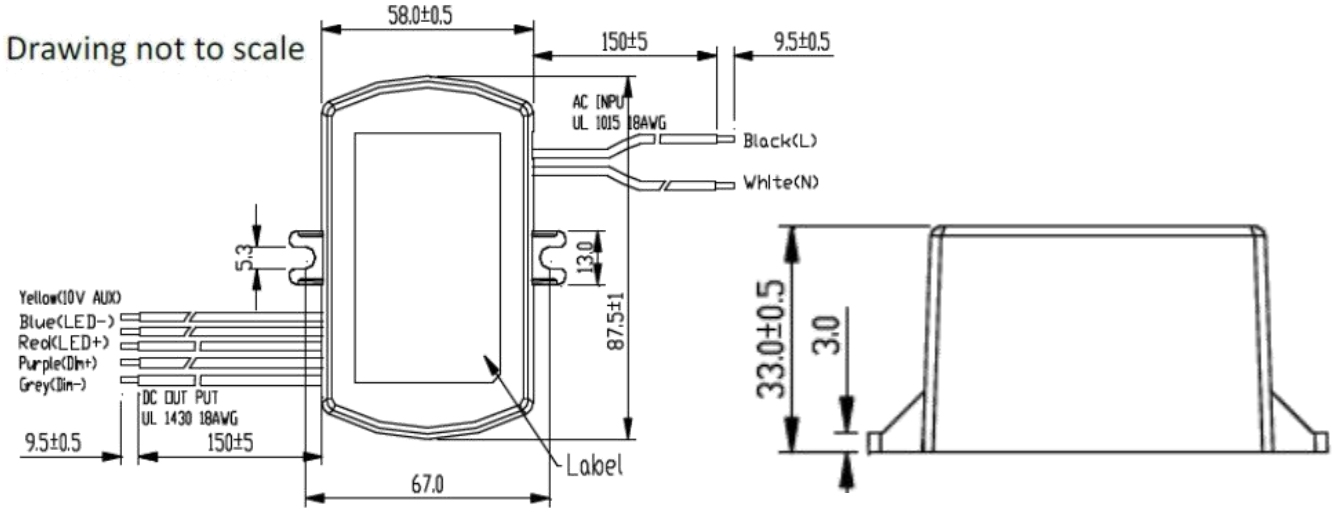

Size:58*87.5*33mm

12W/26W/40W PLP SERIES

-90-305Vac input
-NFC technology programmable without driver power on
-Constant power programmable design
-High efficiency (up to 89%), active power factor correction
-Ultra low THD at light load
-0~10V/ PWM/ Timer,Dim to off option
-AUX 12V/20mA
-UL recognized with HL/ TL/Surge(Diff:4KV,Common:4KV)

5 years warranty

Approvals: IP67 RoHS CE c UL us LISTED (LED DRIVER) E488381

Part number	Constant Power output voltage range	Working Voltage Range	Programmable Constant Current Region
12PLP8-15C	8-15V	5-15V	1.6-1.5A
12PLP24-45C	25-45V	15-45V	0.2-0.5A
26PLP24-40C	24-40V	14.4-40V	0.43-1.08A
26PLP40-68C	40-68V	24-68V	0.26-0.65A
40PLP24-40C	24-40V	14.4-40V	0.67-1.67A
40PLP40-68C	40-68V	24-68V	0.4-1A
40PLP68-114C	68-114V	40.8-114V	0.24-0.59A

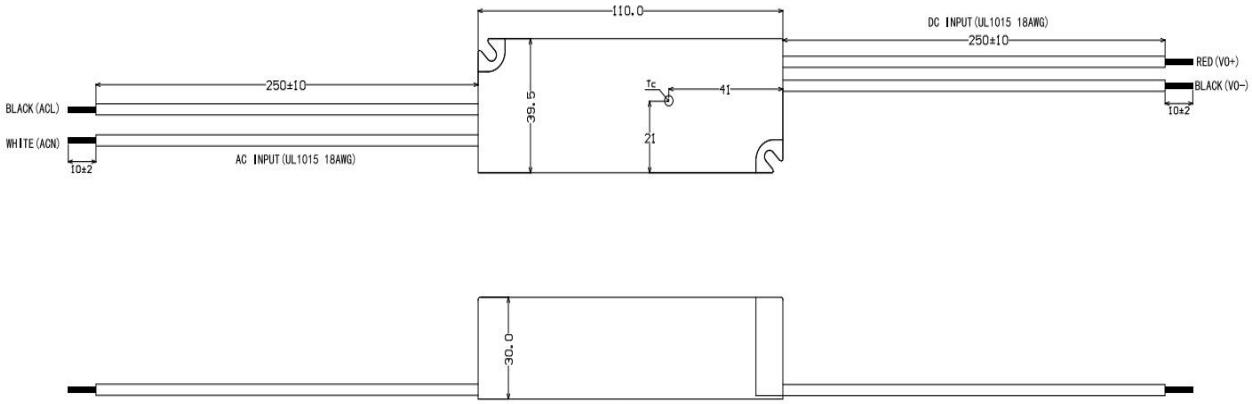

Size:110*39.5*30mm

40W/75W FLA SERIES

- -108-305Vac input
- -NFC technology programmable without driver power on
- -Constant current and voltage hybrid output
- -Constant power programmable design
- -Optional System Interface: DALI/BLE
- -Dim-to-off Option
- -10% dimming,1% dimming optional
- -Ultra low THD at light load
- -12V/200mA AUX

3 years warranty

Approvals: IP67 RoHS CE c UL us LISTED E488381 (LED DRIVER)

Part number	Constant Power output voltage range	Working Voltage Range	Programmable Constant Current Region
40FLA32-54CV	32-54 V	24-54 V	0.125-1.25A
75FLA32-54CV	32-54 V	24-54 V	0.23-2.34A

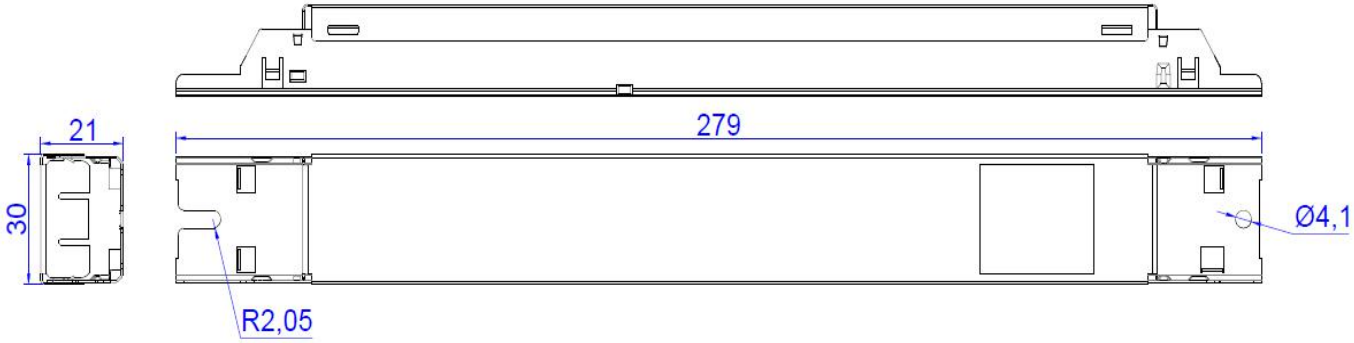

40FLA Size:279*30*21mm

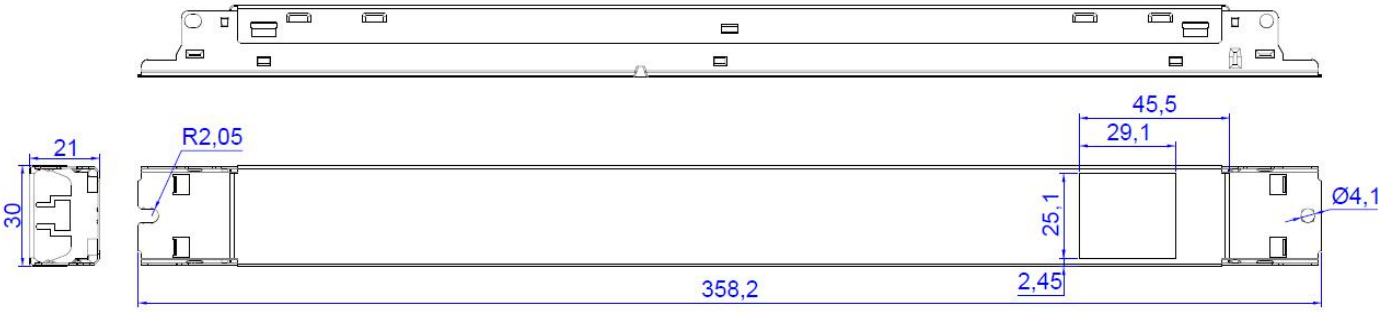

75FLA Size:359*30*21mm

40W ATP SERIES

-90-305Vac input
-NFC technology programmable without driver power on
-Constant power programmable design
-Constant current output
-High efficiency (up to 88%), active power factor correction
-Ultra low THD at light load
-0~10V/ PWM/ Timer,Dim to off option
-10% dimming
-AUX 12V/200mA
-UL recognized with HL/ TL/Surge(Diff:4KV,Common:4KV)

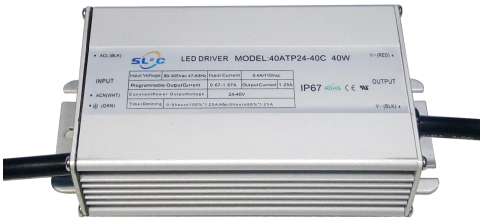

5 years warranty

Approvals: IP67 RoHS CE c UL us LISTED E488381 (LED DRIVER)

Part number	Constant Power output voltage range	Working Voltage Range	Programmable Constant Current Region
40ATP24-40C	24-40V	14.4-40V	0.67-1.67A
40ATP40-68C	40-68V	24-68V	0.4-1A
40ATP68-114C	68-114V	40.8-114V	0.24-0.59A

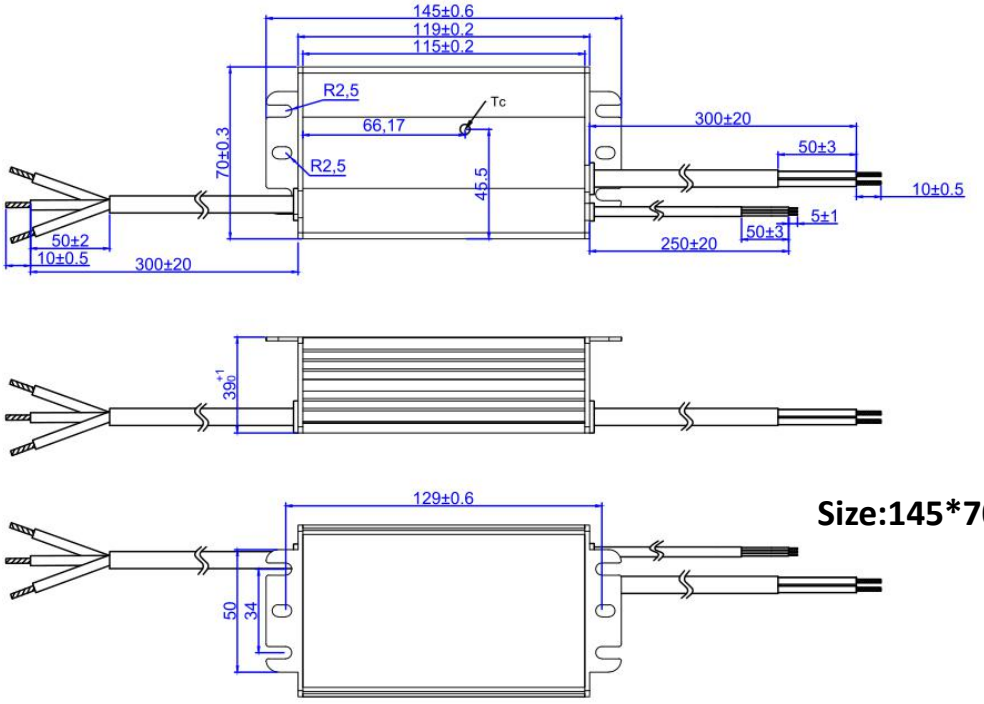

Size:145*70*39mm

60W ATP SERIES

-90-305Vac input
-NFC technology programmable without driver power on
-Constant power programmable design
-Constant current output
-High efficiency (up to 89%), active power factor correction
-Ultra low THD at light load
-0~10V/ PWM/ Timer,Dim to off option
-10% dimming
-AUX 12V/200mA
-UL recognized with HL/ TL/Surge(Diff:4KV,Common:4KV)

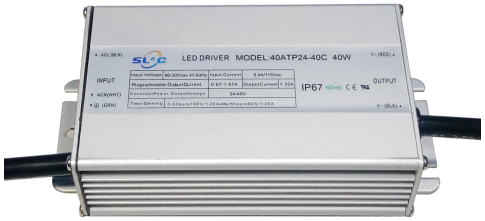

5 years warranty

Approvals: IP67 RoHS CE c UL us LISTED (LED DRIVER) E488381

Part number	Constant Power output voltage range	Working Voltage Range	Programmable Constant Current Region
60ATP24-36C	24-36V	14.4-36V	1-2.5A
60ATP36-60C	36-60V	21.6-60V	0.67-1.67A
60ATP60-102C	60-102V	36-102V	0.4-1A
60ATP102-171C	102-171V	61.2-171V	0.24-0.59A

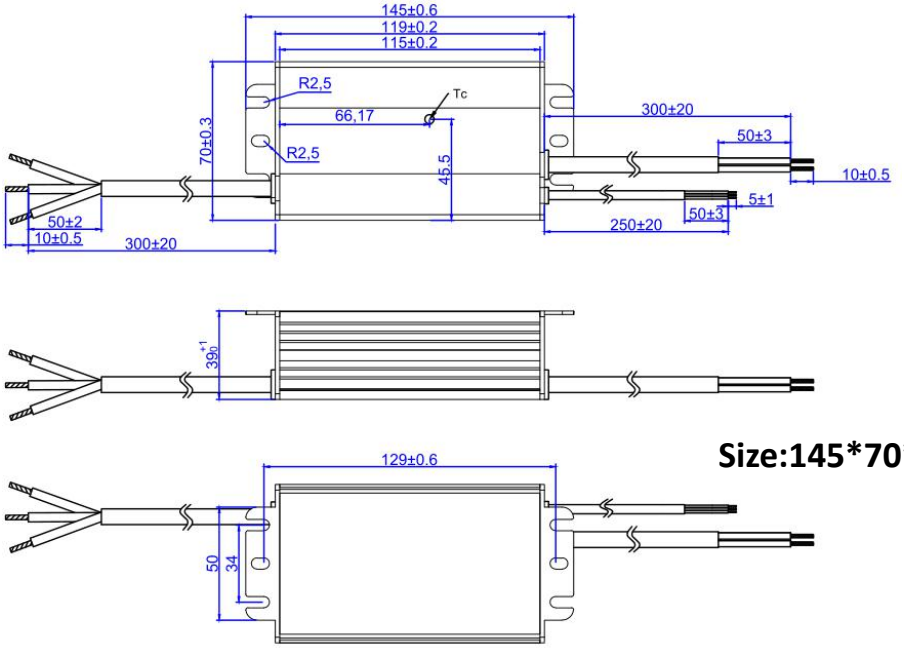

Size:145*70*39mm

75W ATP SERIES

-90-305Vac input
-NFC technology programmable without driver power on
-Constant power programmable design
-Constant current and voltage hybrid output
-High efficiency (up to 90%), active power factor correction
-Ultra low THD at light load
-0~10V/ PWM/ Timer,Dim to off option
-10% dimming,1% dimming optional
-AUX 12V/200mA
-UL recognized with HL/ TL/Surge(Diff:6KV,Common:10KV)

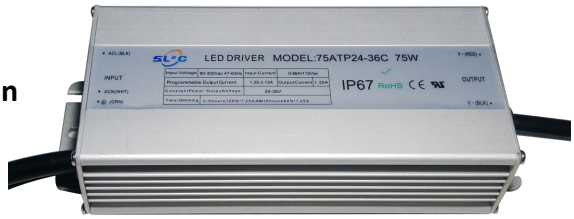

5 years warranty

Approvals: IP67 RoHS CE c UL us LISTED E488381 (LED DRIVER)

Part number	Constant Power output voltage range	Working Voltage Range	Programmable Constant Current Region
75ATP24-36CV	24-36V	15-36V	1.25-3.13A
75ATP36 -48CV	36-48V	22-48V	0.83-2.08A
75ATP48 -80CV	48-80V	29-80V	0.63-1.56A
75ATP80-140CV	80-140V	48-140V	0.38-0.94A
75ATP140-200CV	140-200V	84-214V	0.21-0.54A

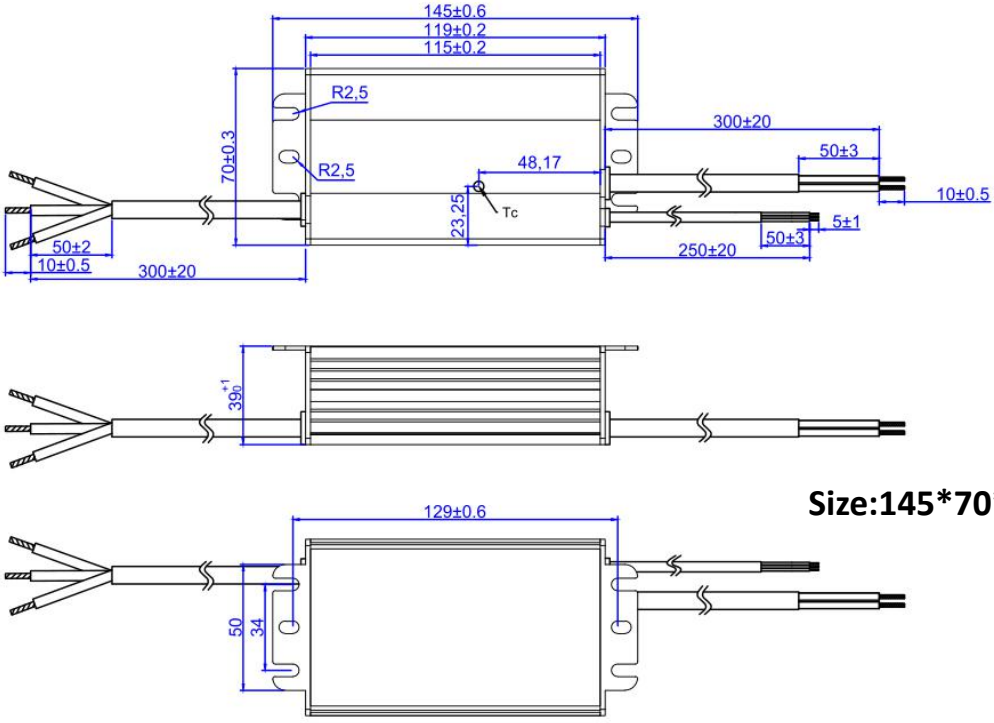

Size:145*70*39mm

96W ATP SERIES

-90-305Vac input
-NFC technology programmable without driver power on
-Constant power programmable design
-Constant current and voltage hybrid output
-High efficiency (up to 93%), active power factor correction
-Ultra low THD at light load
-0~10V/ PWM/ Timer,Dim to off option
-10% dimming,1% dimming optional
-AUX 12V/200mA
-UL recognized with HL/ TL/Surge(Diff:6KV,Common:10KV)

5 years warranty

Approvals: IP67 RoHS CE c UL us LISTED (LED DRIVER) E488381

Part number	Constant Power output voltage range	Working Voltage Range	Programmable Constant Current Region
96ATP24-36CV	24-36 V	14.4-36 V	1.6-4 A
96ATP36-48CV	36-48 V	21.6-48 V	1.07-2.67 A
96ATP48-80CV	48-80 V	28.8-80 V	0.8-2 A
96ATP80-140CV	80-140 V	48-140 V	0.48-1.2 A
96ATP140-233CV	140-233 V	84-233 V	0.27-0.69 A

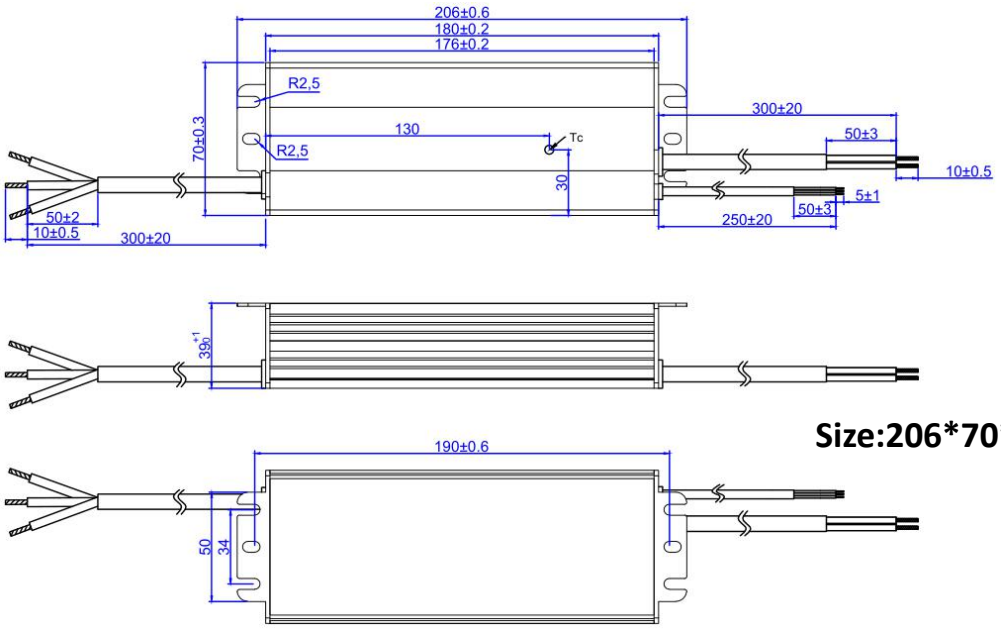

Size:206*70*39mm

120W Outdoor Programmable Led Driver

120W ATP SERIES

-90-305Vac input
-NFC technology programmable without driver power on
-Constant power programmable design
-Constant current and voltage hybrid output
-High efficiency (up to 93%), active power factor correction
-Ultra low THD at light load
-0~10V/ PWM/ Timer,Dim to off option
-10% dimming,1% dimming optional
-AUX 12V/200mA
-UL recognized with HL/ TL/Surge(Diff:6KV,Common:10KV)

5 years warranty

Approvals: IP67 RoHS CE c UL us LISTED (LED DRIVER) E488381

Part number	Constant Power output voltage range	Working Voltage Range	Programmable Constant Current Region
120ATP24-36CV	24-36 V	14.4-36 V	2-5 A
120ATP36-48CV	36-48 V	21.6-48 V	1.33-3.33 A
120ATP48-80CV	48-80 V	28.8-80 V	1-2.5 A
120ATP80-140CV	80-140 V	48-140 V	0.6-1.5 A
120ATP140-274CV	140-274 V	84-274 V	0.34-0.86 A

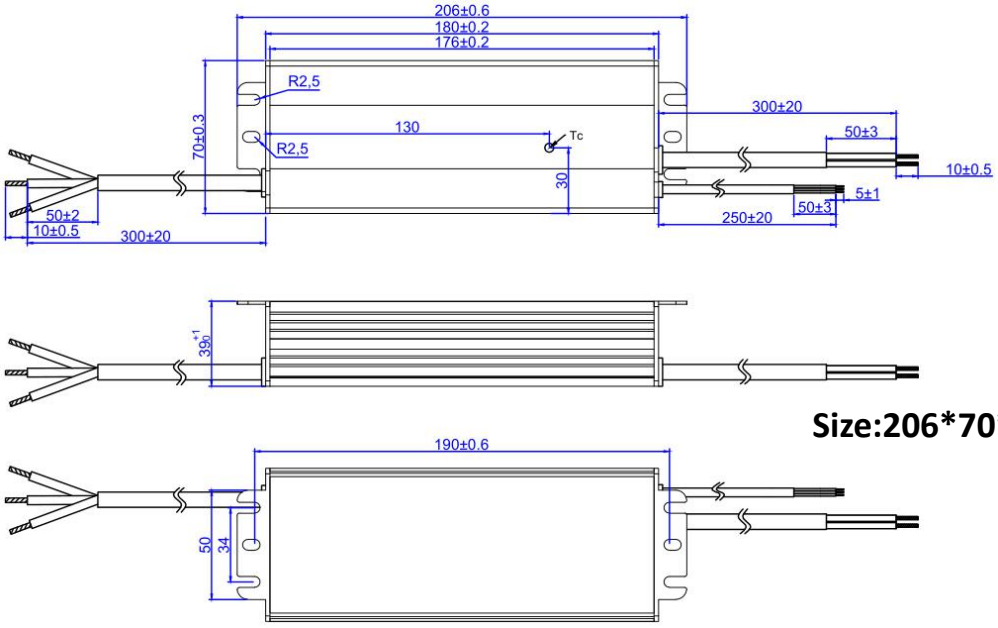

Size:206*70*39mm

160W Outdoor Programmable Led Driver

160W ATP SERIES

-90-305Vac input
-NFC technology programmable without driver power on
-Constant power programmable design
-Constant current and voltage hybrid output
-High efficiency (up to 94%), active power factor correction
-Ultra low THD at light load
-0~10V/ PWM/ Timer,Dim to off option
-10% dimming,1% dimming optional
-AUX 12V/200mA
-UL recognized with HL/ TL/Surge(Diff:6KV,Common:10KV)

5 years warranty

Approvals: IP67 RoHS CE c UL us LISTED (LED DRIVER) E488381

Part number	Constant Power output voltage range	Working Voltage Range	Programmable Constant Current Region
160ATP24-36CV	24-36 V	14.4-36 V	2.67-6.67 A
160ATP36-48CV	36-48 V	21.6-48 V	1.77-4.44 A
160ATP48-80CV	48-80 V	28.8-80 V	1.33-3.33 A
160ATP80-140CV	80-140 V	48-140 V	0.8-2 A
160ATP140-233CV	140-233V	84-233 V	0.45-1.14 A

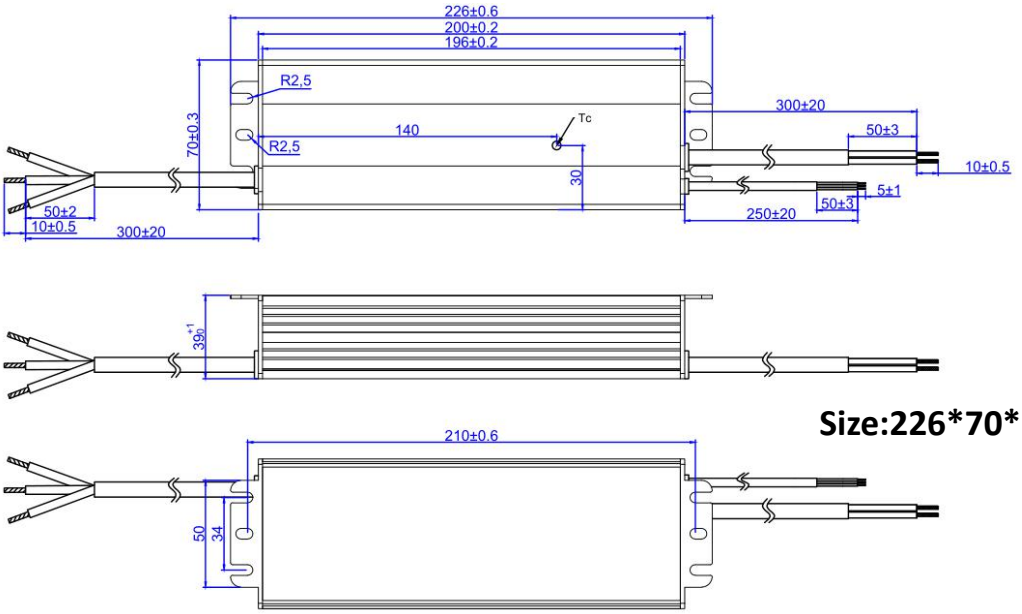

Size:226*70*39mm

200W Outdoor Programmable Led Driver

200W ATP SERIES

-90-305Vac input
-NFC technology programmable without driver power on
-Constant power programmable design
-Constant current and voltage hybrid output
-High efficiency (up to 94%), active power factor correction
-Ultra low THD at light load
-0~10V/ PWM/ Timer,Dim to off option
-10% dimming,1% dimming optional
-AUX 12V/200mA
-UL recognized with HL/ TL/Surge(Diff:6KV,Common:10KV)

5 years warranty

Approvals: IP67 RoHS CE c UL us LISTED (LED DRIVER) E488381

Part number	Constant Power output voltage range	Working Voltage Range	Programmable Constant Current Region
200ATP24-36CV	24-36 V	14.4-36 V	3.3-8.3 A
200ATP36-48CV	36-48 V	21.6-48 V	2.22-5.56 A
200ATP48-80CV	48-80 V	28.8-80 V	1.67-4.17 A
200ATP80-140CV	80-140 V	48-140 V	1-2.5 A
200ATP140-233CV	140-233V	84-233 V	0.57-1.43 A

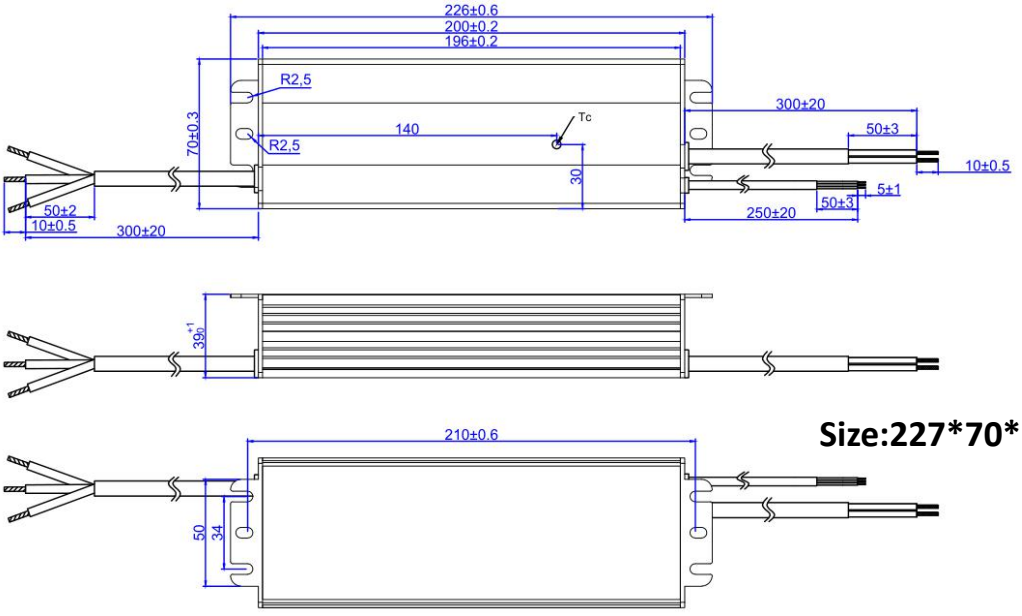

Size:227*70*37mm

250W Outdoor Programmable Led Driver

250W ATP SERIES

-90-305Vac input
-NFC technology programmable without driver power on
-Constant power programmable design
-Constant current and voltage hybrid output
-High efficiency (up to 94%), active power factor correction
-Ultra low THD at light load
-0~10V/ PWM/ Timer,Dim to off option
-10% dimming,1% dimming optional
-AUX 12V/200mA
-UL recognized with HL/ TL/Surge(Diff:6KV,Common:10KV)

5 years warranty

Approvals: IP67 RoHS CE c UL us LISTED (LED DRIVER) E488381

Part number	Constant Power output voltage range	Working Voltage Range	Programmable Constant Current Region
250ATP24-36CV	24-36 V	14.4-36 V	4.1-10.4 A
250ATP36-48CV	36-48 V	21.6-48 V	2.7-6.9A
250ATP48-80CV	48-80 V	28.8-80 V	2.0-5.2 A
250ATP80-140CV	80-140 V	48-140 V	1.2-3.2 A
250ATP140-233CV	140-233V	84-233 V	1.0-1.78 A
250ATP233-277CV	233-277V	140-277 V	0.43-1.07 A

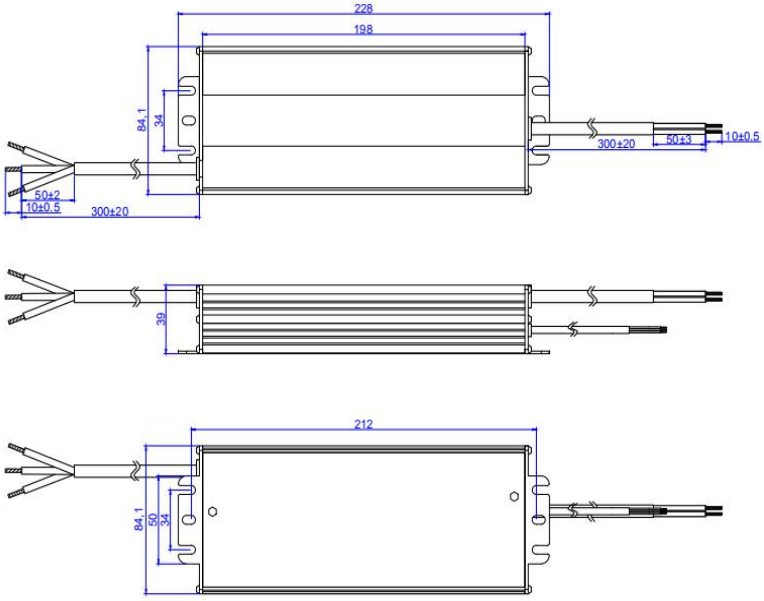

Size:228*84*39mm

300W ATP SERIES

-90-305Vac input
-NFC technology programmable without driver power on
-Constant power programmable design
-Constant current and voltage hybrid output
-High efficiency (up to 94%), active power factor correction
-Ultra low THD at light load
-0~10V/ PWM/ Timer,Dim to off option
-10% dimming,1% dimming optional
-AUX 12V/200mA
-UL recognized with HL/ TL/Surge(Diff:6KV,Common:10KV)

5 years warranty

Approvals: IP67 RoHS CE c UL us LISTED (LED DRIVER) E488381

Part number	Constant Power output voltage range	Working Voltage Range	Programmable Constant Current Region
300ATP24-36CV	24-36 V	14.4-36 V	5.0-12.5 A
300ATP36-48CV	36-48 V	21.6-48 V	3.3-8.3 A
300ATP48-80CV	48-80 V	28.8-80 V	2.5-6.25 A
300ATP80-140CV	80-140 V	48-140 V	1.5-3.75 A
300ATP140-233CV	140-233V	84-233 V	0.86-2.14 A
300ATP233-375CV	233-375V	140-375V	0.51-1.29A

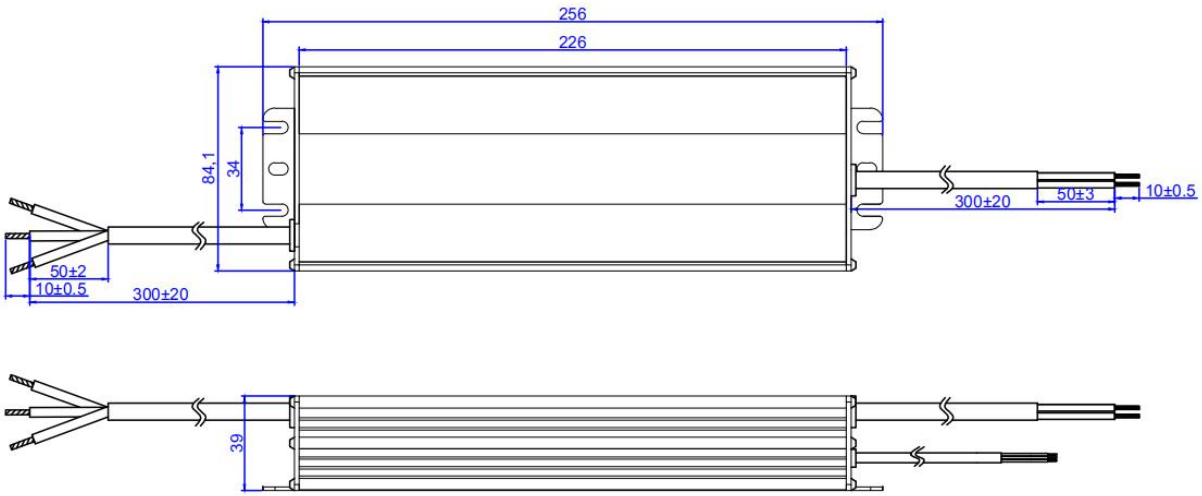

Size:256*84*39mm

350W Outdoor Programmable Led Driver

350W ATP SERIES

-90-305Vac input
-NFC technology programmable without driver power on
-Constant power programmable design
-Constant current and voltage hybrid output
-High efficiency (up to 94%), active power factor correction
-Ultra low THD at light load
-0~10V/ PWM/ Timer,Dim to off option
-10% dimming,1% dimming optional
-AUX 12V/200mA
-UL recognized with HL/ TL/Surge(Diff:6KV,Common:10KV)

5 years warranty

Approvals: IP67 RoHS CE c UL us LISTED (LED DRIVER) E488381

Part number	Constant Power output voltage range	Working Voltage Range	Programmable Constant Current Region
350ATP24-36CV	24-36 V	14.4-36 V	5.83-14.58 A
350ATP36-54CV	36-54V	32.4-54 V	3.89-9.72 A
350ATP54-80CV	54-80 V	28.8-80 V	2.59-6.48A
350ATP80-140CV	80-140 V	48-140 V	1.75-4.37A
350ATP140-233CV	140-233V	84-233 V	1-2.5A
350ATP233-375CV	233-375V	140-375 V	0.6-1.5 A

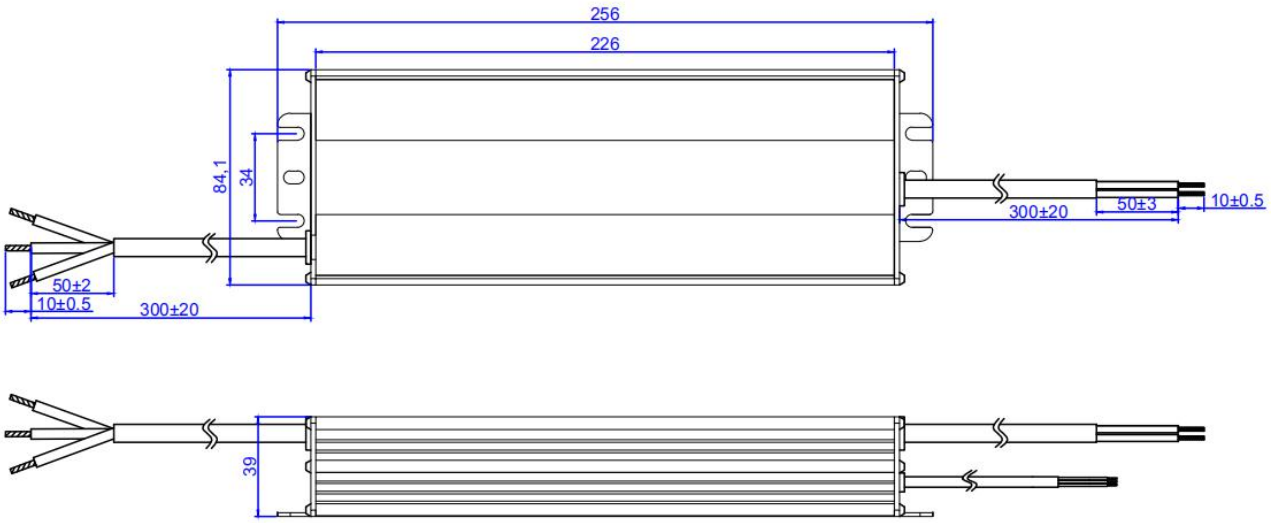

Size:256*84*39mm

400ATP 400W Universal Input Programmable LED Driver

-108-305Vac input
-NFC technology programmable without driver power on
-Constant power programmable design,CC/CV hybrid output
-High efficiency (up to 95%), active power factor correction
-0~10V/ PWM/ Timer dimming,Dim to off option
-10% dimming,1% dimming optional
-AUX 12V/200mA, 500mA optional
-UL listed Class P
-High Surge capablity Diff:6KV,Common:10KV

5 years warranty

Approvals: IP67 RoHS CE c UL us LISTED (LED DRIVER) E488381

Part number	Constant Power output voltage range	Working Voltage Range	Programmable Constant Current Region
400ATP36CV	30-36 V	18-36V	5.33-13.33A
400ATP48CV	42-48 V	25-48V	3.81-9.52A
400ATP56CV	48-56 V	28-56V	3.33-8.33A
400ATP80CV	64-80 V	38-80V	2.5-6.25A
400ATP140CV	112-140V	67-140V	1.43-3.57A
400ATP180CV	140-180 V	84-180V	1.14-2.86A
400ATP240CV	192-240 V	115-240V	0.83-2.08A
400ATP300CV	240-300V	144-300V	0.67-1.67A
400ATP375CV	300-375V	180-375V	0.53-1.33A
400ATP460CV	375-460V	225-460V	0.43-1.07A

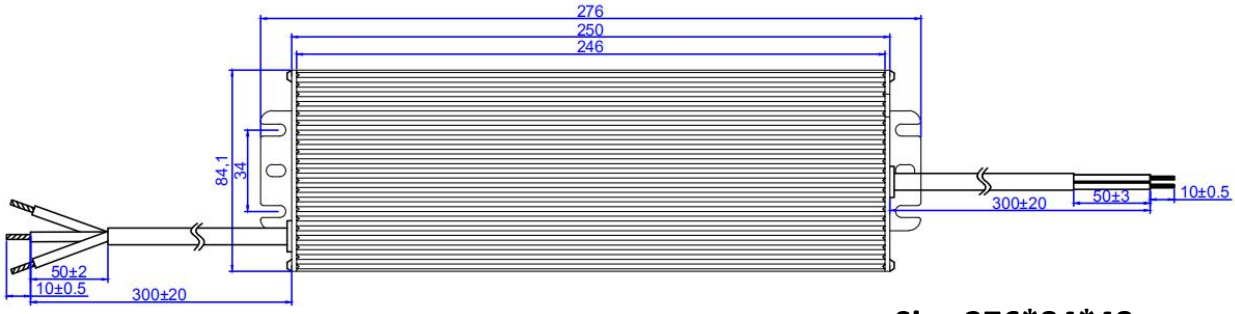

Size:276*84*48mm

500ATP 500W Universal Input Programmable LED Driver

- -108-305Vac input
- -NFC technology programmable without driver power on
- -Constant power programmable design,CC/CV hybrid output
- -High efficiency (up to 95%), active power factor correction
- -0~10V/ PWM/ Timer dimming,Dim to off option
- -10% dimming,1% dimming optional
- -AUX 12V/200mA, 500mA optional
- -UL listed Class P
- -High Surge capablity Diff:6KV,Common:10KV

5 years warranty

Approvals: IP67 RoHS CE c UL us LISTED E488381 (LED DRIVER)

Part number	Working Voltage Range	Constant Power output voltage range	Programmable Constant Current Region
500ATP36CV	18-36V	30-36 V	6.67-16.67A
500ATP48CV	25-48V	42-48 V	4.76-11.90A
500ATP56CV	28-56V	48-56 V	4.17-10.42A
500ATP80CV	38-80V	64-80 V	3.13-7.81A
500ATP140CV	67-140V	112-140V	1.79-4.46A
500ATP180CV	84-180V	140-180 V	1.43-3.57A
500ATP240CV	115-240V	192-240 V	1.04-2.60A
500ATP300CV	144-300V	240-300V	0.83-2.08A
500ATP375CV	180-375V	300-375V	0.67-1.67A
500ATP460CV	225-460V	375-460V	0.53-1.33A

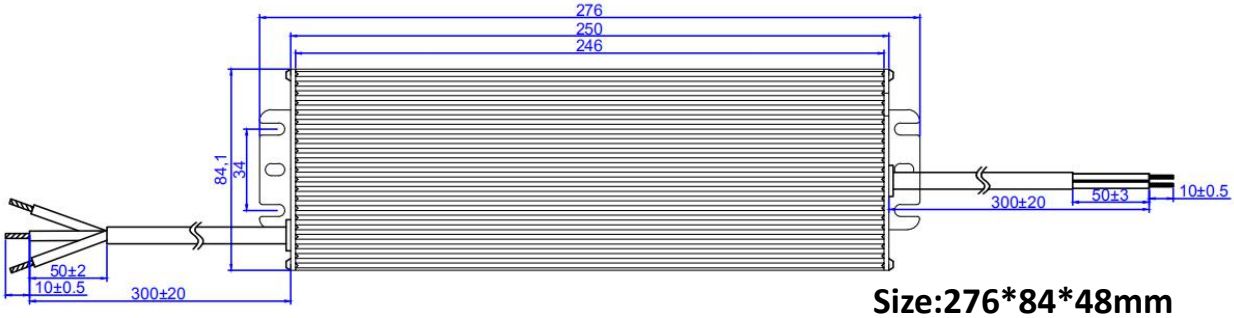

Size:276*84*48mm

600ATP 600W Universal Input Programmable LED Driver

-108-305Vac input
-NFC technology programmable without driver power on
-Constant power programmable design,CC/CV hybrid output
-High efficiency (up to 95%), active power factor correction
-0~10V/ PWM/ Timer dimming,Dim to off option
-10% dimming,1% dimming optional
-AUX 12V/200mA, 500mA optional
-UL listed Class P
-High Surge capablity Diff:6KV,Common:10KV

5 years warranty

Approvals: IP67 RoHS CE c UL us LISTED (LED DRIVER) E488381

Part number	Working Voltage Range	Constant Power output voltage range	Programmable Constant Current Region
600ATP36CV	18-36V	30-36 V	6.67-16.67A
600ATP48CV	25-48V	42-48 V	5.7-14.2A
600ATP56CV	28-56V	48-56 V	5-12.5A
600ATP80CV	38-80V	64-80 V	3.75-9.37A
600ATP140CV	67-140V	112-140V	2.14-5.36A
600ATP180CV	84-180V	140-180 V	1.71-4.28A
600ATP240CV	115-240V	192-240 V	1.25-3.13A
600ATP300CV	144-300V	240-300V	1.0-2.5A
600ATP375CV	180-375V	300-375V	0.8-2A
600ATP460CV	225-460V	375-460V	0.4-1.6A

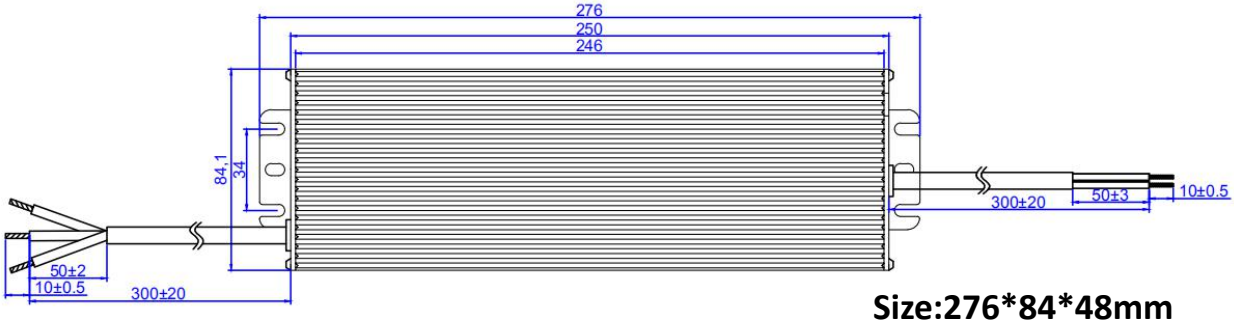

Size:276*84*48mm

680ATP

680W Universal Input Programmable LED Driver

-108-305Vac input
-NFC technology programmable without driver power on
-Constant power programmable design,CC/CV hybrid output
-High efficiency (up to 95%), active power factor correction
-0~10V/ PWM/ Timer dimming,Dim to off option
-10% dimming,1% dimming optional
-AUX 12V/200mA, 500mA optional
-UL listed Class P
-High Surge capablity Diff:6KV,Common:10KV

5 years warranty

Approvals: IP67 RoHS CE c UL us LISTED (LED DRIVER) E488381

Part number	Working Voltage Range	Programmable Constant Current Region
680ATP48CV	25-48V	5.7-14.2A
680ATP56CV	28-56V	5-12.5A
680ATP80CV	38-80V	3.75-9.37A
680ATP140CV	67-140V	2.14-5.36A
680ATP180CV	84-180V	1.71-4.28A
680ATP240CV	115-240V	1.25-3.13A
680ATP300CV	144-300V	1.0-2.5A
680ATP375CV	180-375V	0.8-2A
680ATP460CV	225-460V	0.4-1.6A

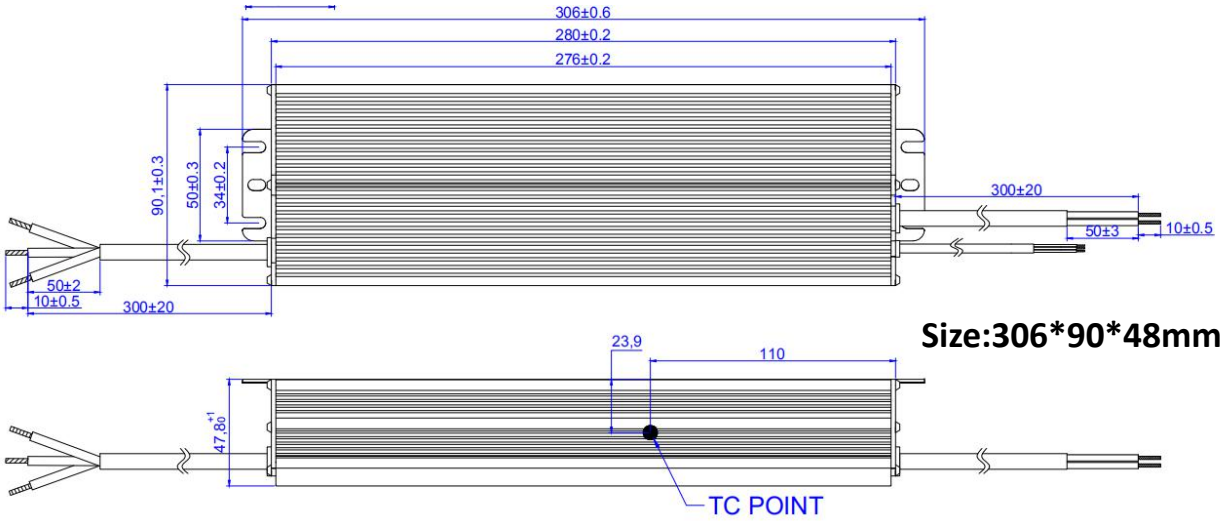

Size:306*90*48mm

600W Universal Input Constant Voltage LED Driver

600ATP CV

-108-305Vac input
-High efficiency (up to 95%),
-Active power factor correction
-12V/24V constant voltage output
--High Surge capablity Diff:6KV,Common:10KV

5 years warranty

Approvals: IP67 RoHS CE c UL us LISTED E488381 (LED DRIVER)

Part number	Ourput Voltage	Output Current Region
600ATP12CV	12V	0-50A
600ATP24CV	24V	0-25A

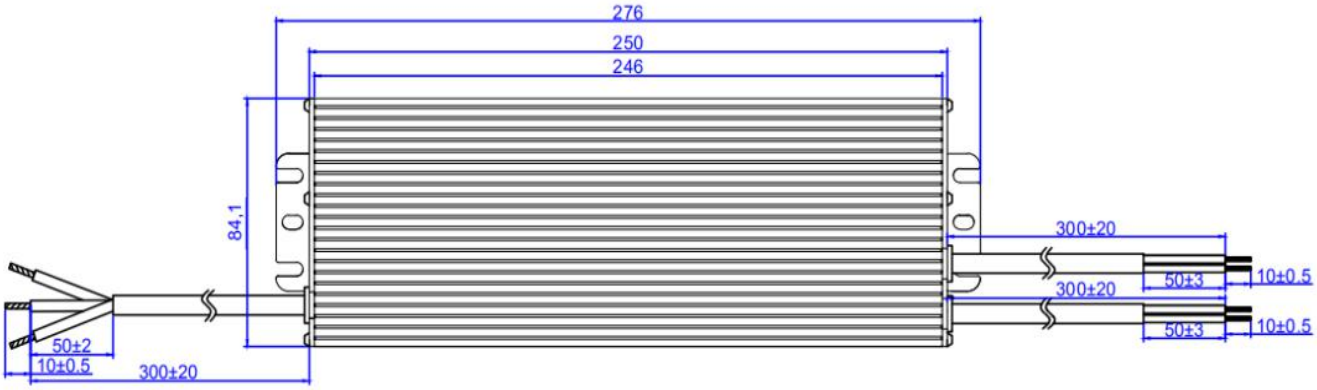

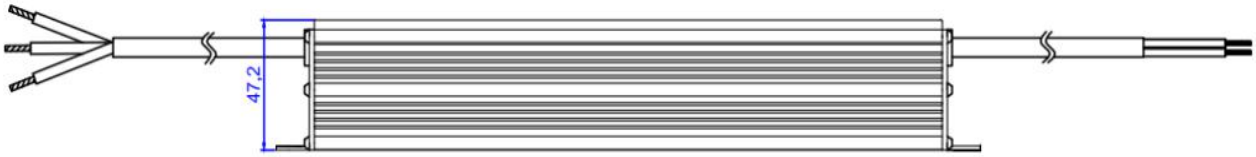

Size:276*84*48mm

160W AHP SERIES

-249-528Vac input
-NFC technology programmable without driver power on
-Constant power programmable design
-Constant current and voltage hybrid output
-High efficiency (up to 94%), active power factor correction
-Ultra low THD at light load
-0~10V/ PWM/ Timer,Dim to off option
-10% dimming,1% dimming optional
-AUX 12V/200mA
-UL recognized with HL/ TL/Surge(Diff:6KV,Common:10KV)

5 years warranty

Approvals: IP67 RoHS CE c UL us LISTED (LED DRIVER) E488381

Part number	Constant Power output voltage range	Working Voltage Range	Programmable Constant Current Region
160AHP24-36CV	24-36 V	14.4-36 V	2.67-6.67 A
160AHP36-54CV	36-54 V	21.6-48 V	1.77-4.44 A
160AHP54-80CV	54-80 V	32.4-80 V	1.19-2.96A
160AHP80-140CV	80-140 V	48-140 V	0.8-2 A
160AHP140-233CV	140-233V	84-233 V	0.45-1.14 A

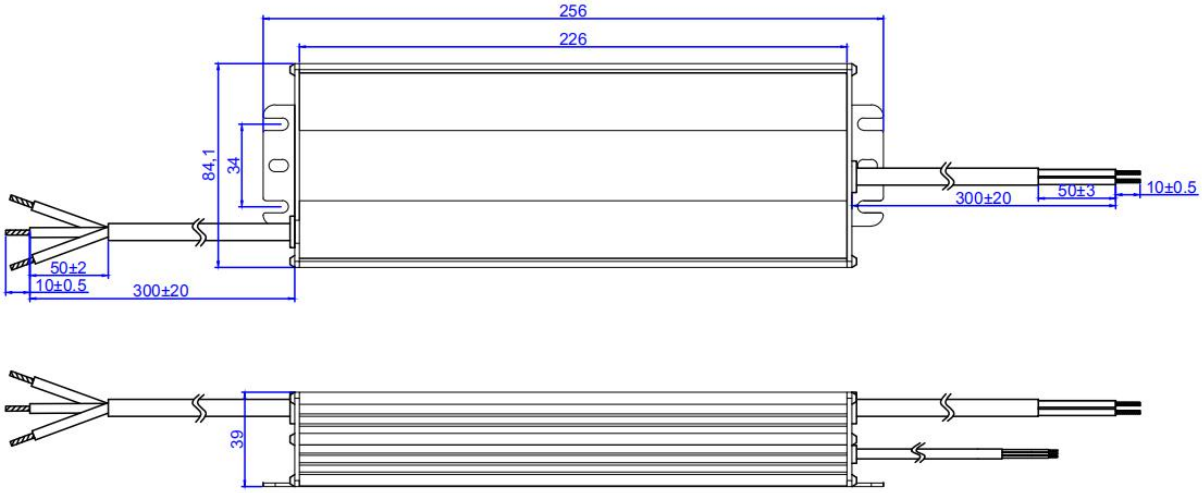

Size:256*84*39mm

250W AHP SERIES

-249-528Vac input
-NFC technology programmable without driver power on
-Constant power programmable design
-Constant current and voltage hybrid output
-High efficiency (up to 94%), active power factor correction
-Ultra low THD at light load
-0~10V/ PWM/ Timer,Dim to off option
-10% dimming,1% dimming optional
-AUX 12V/200mA
-UL recognized with HL/ TL/Surge(Diff:6KV,Common:10KV)

5 years warranty

Approvals: IP67 RoHS CE c UL us LISTED (LED DRIVER) E488381

Part number	Constant Power output voltage range	Working Voltage Range	Programmable Constant Current Region
250AHP24-36CV	24-36 V	14.4-36 V	4.17-10.42 A
250AHP36-54CV	36-54V	21.6-54 V	2.78-6.94 A
250AHP54-80CV	54-80 V	32.4-80 V	2.08-4.63 A
250AHP80-140CV	80-140 V	48-140 V	1.25-3.13 A
250AHP140-233CV	140-233V	84-233 V	0.71-1.79 A
250AHP233-375CV	233-375V	140-375 V	0.43-1.07A

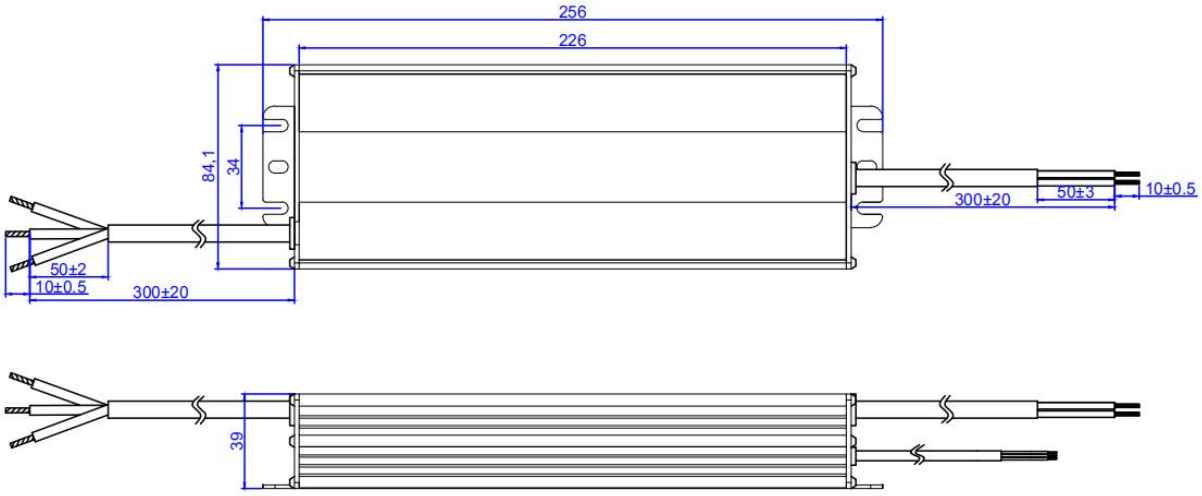

Size:256*84*39mm

350W High Line Input Programmable LED Driver

350W AHP SERIES

-249-528Vac input
-NFC technology programmable without driver power on
-Constant power programmable design
-Constant current and voltage hybrid output
-High efficiency (up to 94%), active power factor correction
-Ultra low THD at light load
-0~10V/ PWM/ Timer,Dim to off option
-10% dimming,1% dimming optional
-AUX 12V/200mA
-UL recognized with HL/ TL/Surge(Diff:6KV,Common:10KV)

5 years warranty

Approvals: IP67 RoHS CE c UL us LISTED E488381 (LED DRIVER)

Part number	Constant Power output voltage range	Working Voltage Range	Programmable Constant Current Region
350AHP24-36CV	24-36 V	14.4-36 V	5.83-14.58 A
350AHP36-54CV	36-54V	21.6-54 V	3.89-9.72 A
350AHP54-80CV	54-80 V	32.4-80 V	2.59-6.48A
350AHP80-140CV	80-140 V	48-140 V	1.75-4.37A
350AHP140-233CV	140-233V	84-233 V	1-2.5A
350AHP233-375CV	233-375V	140-375 V	0.6-1.5 A

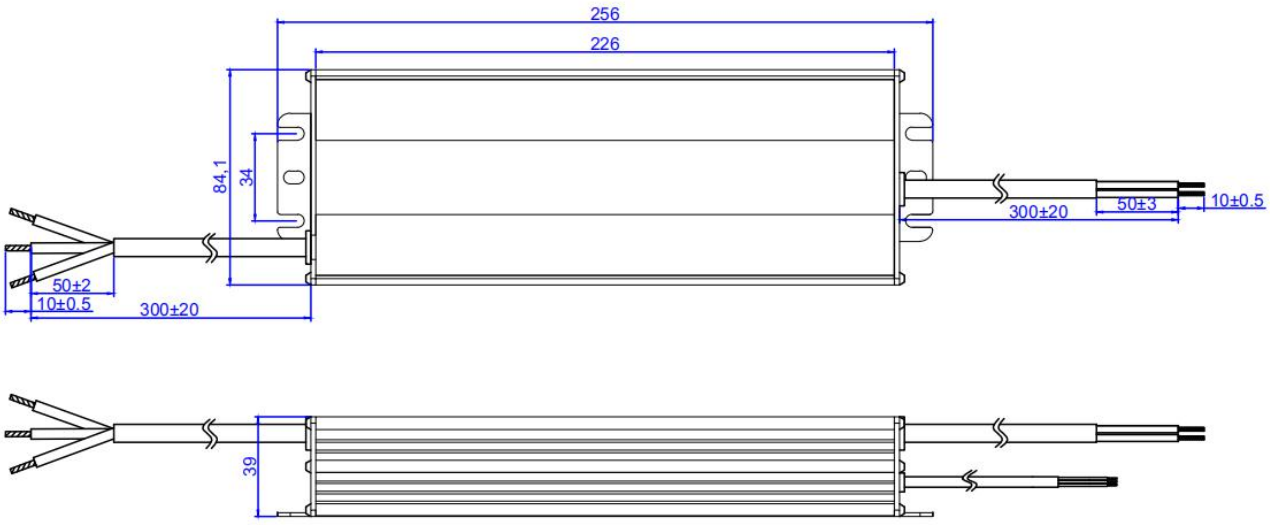

Size:256*84*39mm

500AHP 500W High Line Input Programmable LED Driver

-249-528Vac input
-NFC technology programmable without driver power on
-Constant power programmable design,CC/CV hybrid output
-High efficiency (up to 95%), active power factor correction
-0~10V/ PWM/ Timer dimming,Dim to off option
-10% dimming,1% dimming optional
-AUX 12V/200mA, 500mA optional
-UL listed Class P
-High Surge capablity Diff:6KV,Common:10KV

5 years warranty

Approvals: IP67 RoHS CE c UL us LISTED E488381 (LED DRIVER)

Part number	Constant Power output voltage range	Working Voltage Range	Programmable Constant Current Region
500AHP36CV	30-36 V	18-36V	6.67-16.67A
500AHP48CV	42-48 V	25-48V	4.76-11.90A
500AHP56CV	48-56 V	28-56V	4.17-10.42A
500AHP80CV	64-80 V	38-80V	3.13-7.81A
500AHP140CV	112-140V	67-140V	1.79-4.46A
500AHP180CV	140-180 V	84-180V	1.43-3.57A
500AHP240CV	192-240 V	115-240V	1.04-2.60A
500AHP300CV	240-300V	144-300V	0.83-2.08A
500AHP375CV	300-375V	180-375V	0.67-1.67A
500AHP460CV	375-460V	225-460V	0.53-1.33A

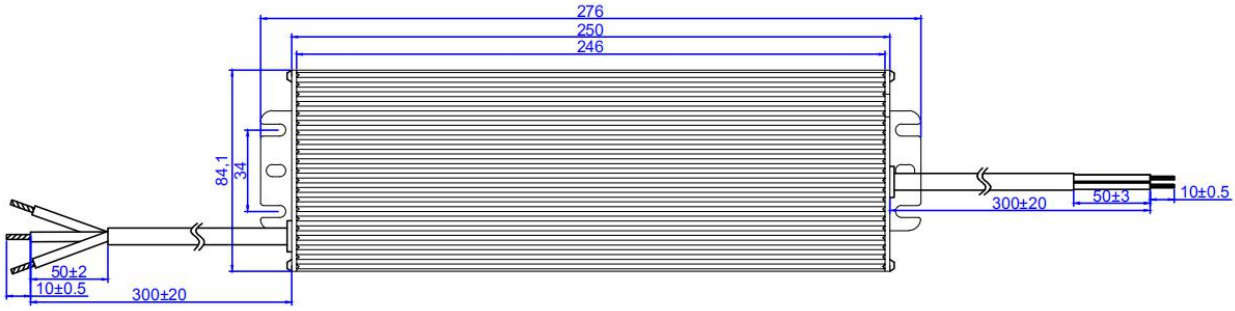

Size:276*84*48mm

600AHP

600W High Line Input Programmable LED Driver

-249-528Vac input
-NFC technology programmable without driver power on
-Constant power programmable design,CC/CV hybrid output
-High efficiency (up to 95%), active power factor correction
-0~10V/ PWM/ Timer dimming,Dim to off option
-10% dimming,1% dimming optional
-AUX 12V/200mA, 500mA optional
-UL listed Class P
-High Surge capablity Diff:6KV,Common:10KV

5 years warranty

Approvals: IP67 RoHS CE c UL us LISTED E488381 (LED DRIVER)

Part number	Constant Power output voltage range	Working Voltage Range	Programmable Constant Current Region
600AHP36CV	30-36 V	18-36V	8-20A
600AHP48CV	42-48 V	25-48V	5.7-14.2A
600AHP56CV	48-56 V	28-56V	5-12.5A
600AHP80CV	64-80 V	38-80V	3.75-9.37A
600AHP140CV	112-140V	67-140V	2.14-5.36A
600AHP180CV	140-180 V	84-180V	1.71-4.28A
600AHP240CV	192-240 V	115-240V	1.25-3.13A
600AHP300CV	240-300V	144-300V	1.0-2.5A
600AHP375CV	300-375V	180-375V	0.8-2A
600AHP460CV	375-460V	225-460V	0.4-1.6A

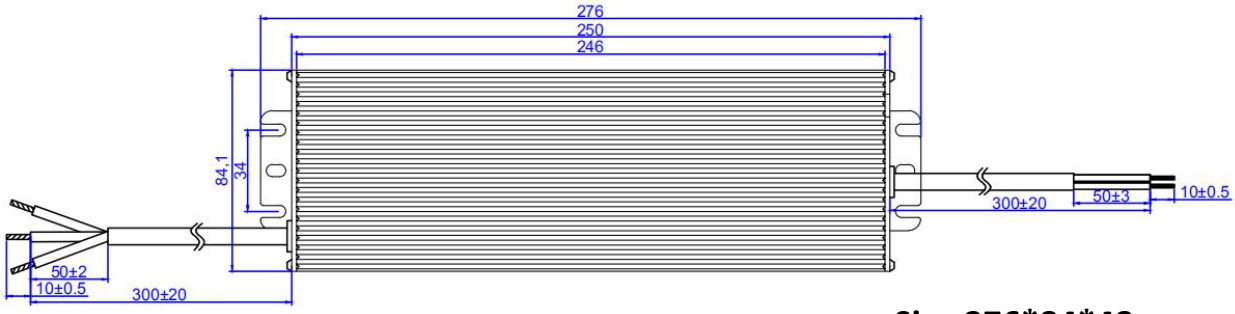

Size:276*84*48mm

680AHP 680W High Line Input Programmable LED Driver

-249-528Vac input
-NFC technology programmable without driver power on
-Constant power programmable design,CC/CV hybrid output
-High efficiency (up to 95%), active power factor correction
-0~10V/ PWM/ Timer dimming,Dim to off option
-10% dimming,1% dimming optional
-AUX 12V/200mA, 500mA optional
-UL listed Class P
-High Surge capablity Diff:6KV,Common:10KV

5 years warranty

Approvals: IP67 RoHS CE c UL us LISTED E488381 (LED DRIVER)

Part number	Working Voltage Range	Programmable Constant Current Region
680AHP48CV	25-48V	5.7-14.2A
680AHP56CV	28-56V	5-12.5A
680AHP80CV	38-80V	3.75-9.37A
680AHP140CV	67-140V	2.14-5.36A
680AHP180CV	84-180V	1.71-4.28A
680AHP240CV	115-240V	1.25-3.13A
680AHP300CV	144-300V	1.0-2.5A
680AHP375CV	180-375V	0.8-2A
680AHP460CV	225-460V	0.4-1.6A

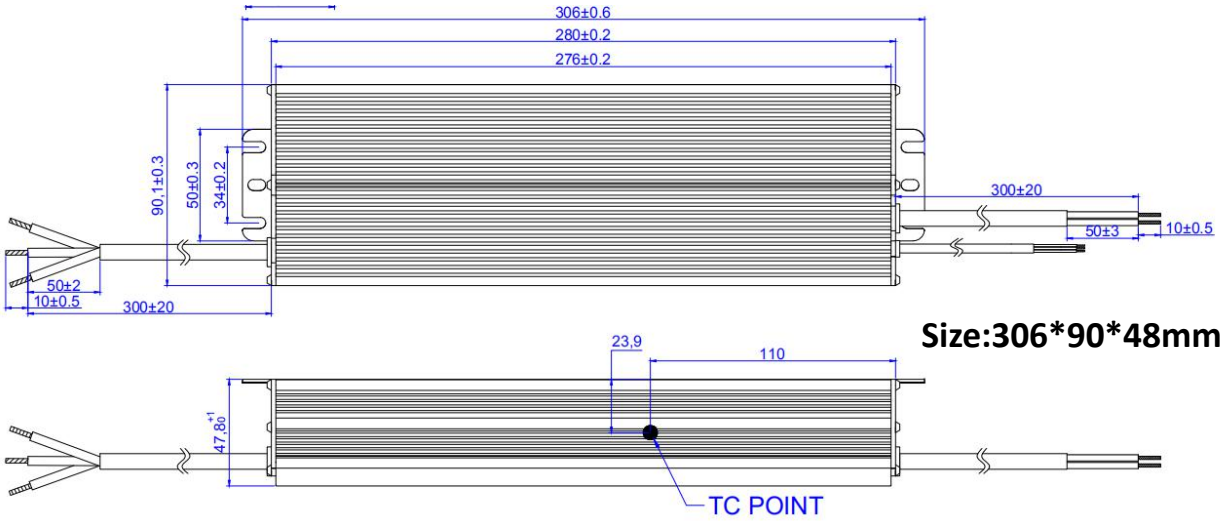

Size:306*90*48mm

Hangzhou sllcpower Co.,Ltd.

Tel:+86 0571-5692 8721
Email:sales@sllcpower.com
Web:www.sllcpower.com
Address:Floor 11, building 3, No. 259, Wensan Road, HangZhou City,ZheJiang Province,China.